Parts List Manual

Sc Series Compact Tractor

Sc2400

Cub Cadet Yanmar LLC
P.O. Box 361052
Cleveland, OH 44136-1052

PRINTED IN U.S.A.

Form No.769-03821
(08/08)

INSTRUCTIONS FOR PARTS LIST MANUAL

ENGINE SECTION - PAGES 3 THROUGH 31

TRACTOR SECTION - PAGES 32 THROUGH 180

EXAMPLE - FIGURE & REFERENCE NUMBERS

FIG. 88. METER

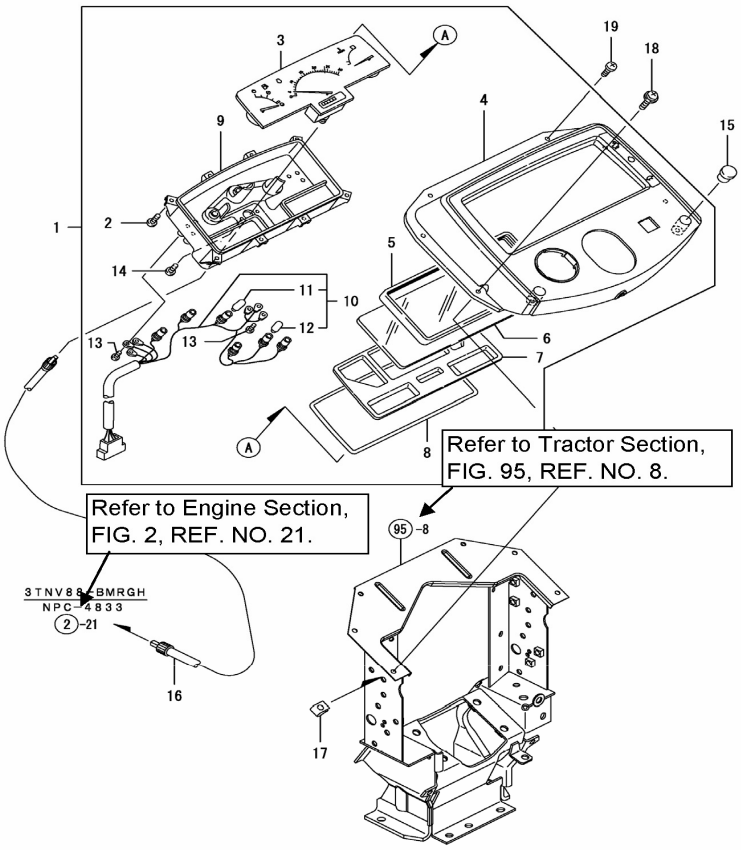

ENGINE SECTION INDEX

FIG. NO.	GROUP NAME
1	CYLINDER BLOCK
2	GEAR HOUSING
3	OIL PAN & REAR ENGINE PLATE
4	CYLINDER HEAD & VALVE COVER
5	AIR CLEANER
6	EXHAUST MANIFOLD & MUFFLER
7	CAMSHAFT & TIMING PARTS
8	CRANKSHAFT & PISTON
9	LUBRICATING PARTS
10	COOLING WATER SYSTEM
11	FUEL INJECTION PUMP
12	GOVERNOR
13	FUEL SUPPLY PARTS
14	STARTER
15	ALTERNATOR

TRACTOR SECTION STARTS ON PAGE 32

NOTES:

FIG. 1. CYLINDER BLOCK

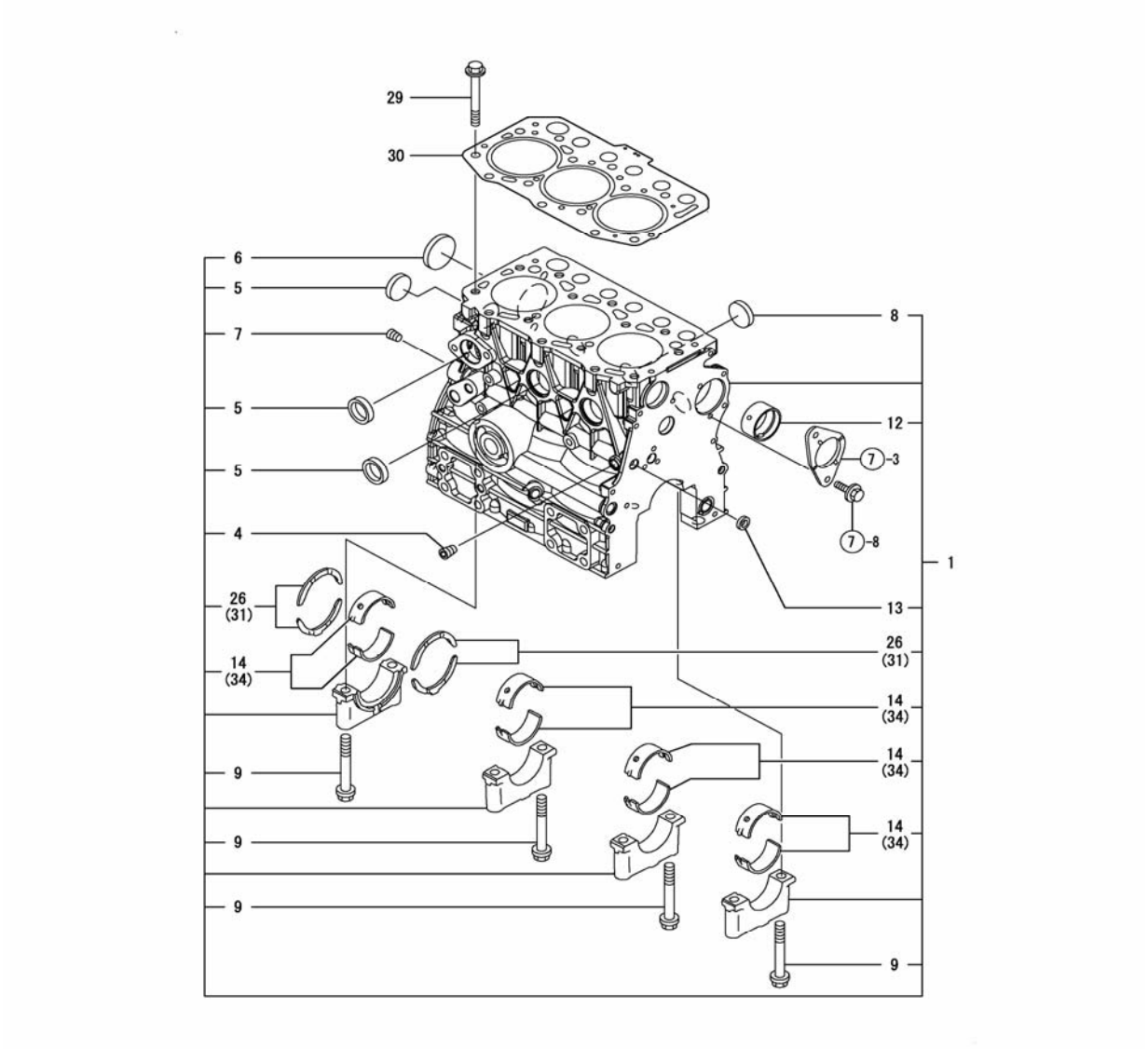

REF NO.	PART NUMBER	DESCRIPTION	QTY
1	CY-719517-01560	BLOCK ASSY, CYLINDER	1
4	CY-124060-01050	PLUG PT1/8	1
5	CY-105311-01090	PLUG 30 (SUS)	4
6	CY-119623-01250	PLUG 45	1
7	CY-124160-01910	PLUG PT1/4	1
8	CY-119285-01990	PLUG 25	3
9	CY-119620-02020	BOLT	8
12	CY-119717-02411	BUSH, CAMSHAFT	1
13	CY-27241-120000	PLUG 12	1
14	CY-719717-02901	MAIN BEARING SET	4
26	CY-119717-02930	BEARING, THRUST	2
29	CY-119515-01200	BOLT, CYLINDER HEAD	14
30	CY-119517-01330	GASKET, CYL.HEAD	1
31	CY-119810-02941	BEARING,THRUST Over-size 0.25	2
34	CY-719717-02911	MAIN METAL Under-size 0.25	4

Copyright 2007 Cub Cadet Yanmar LLC

FIG. 2. GEAR HOUSING

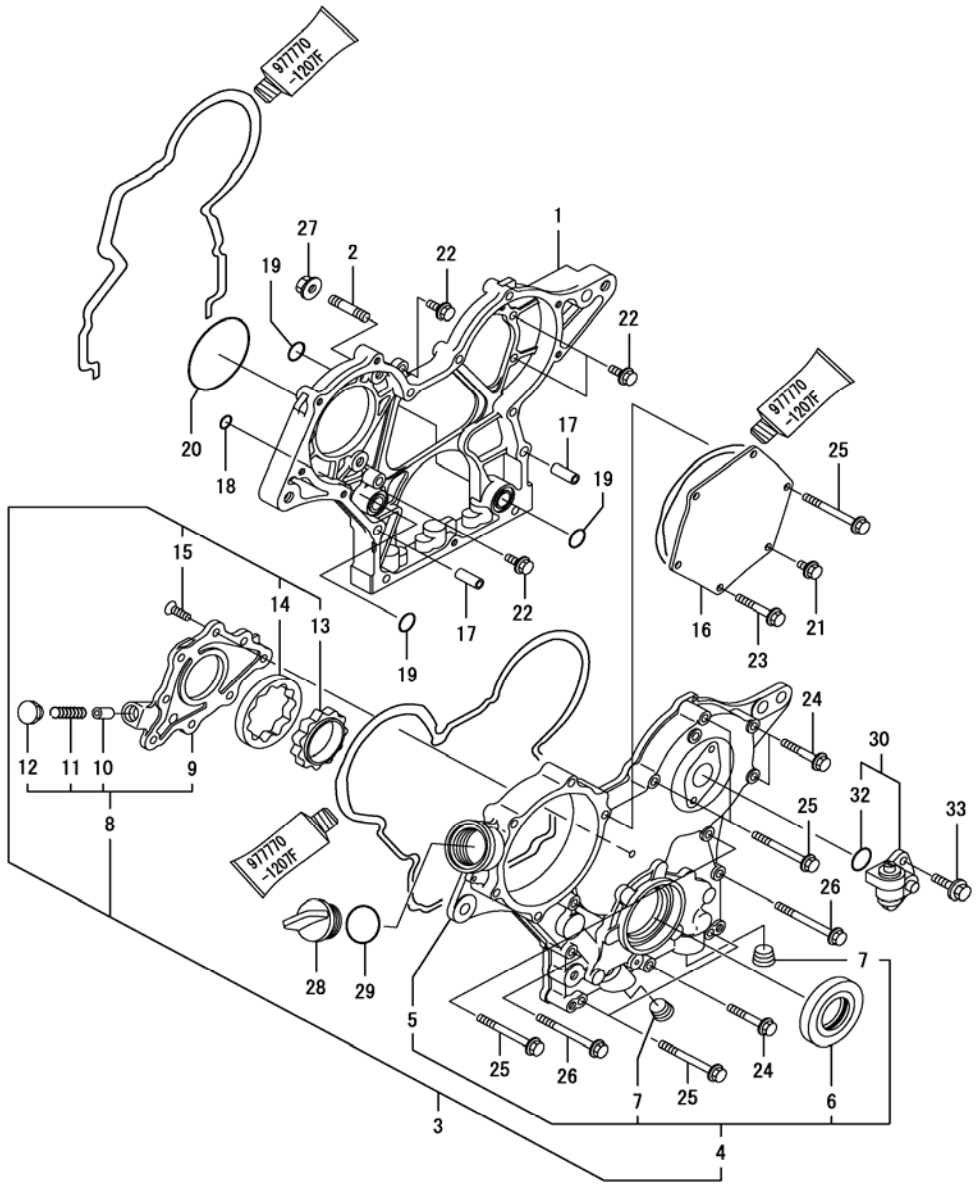

Copyright 2007 Cub Cadet Yanmar LLC

FIG. 2. GEAR HOUSING

REF NO.	PART NUMBER	DESCRIPTION	QTY
1	CY-119717-01501	CASE, GEAR	1
2	CY-119717-01570	BOLT, STUD M8	3
3	CY-119734-01580	COVER ASSY,GEAR CASE	1
4	N/A	COVER ASSY,GEAR CASE (ORDER REF NO.3)	1
5	N/A	COVER, GEAR CASE (ORDER REF NO.3)	1
6	CY-119717-01800	SEAL, OIL	1
7	CY-23876-030000	PLUG PT3/8,SCREW	2
8	CY-119717-32100	COVER ASSY, PUMP	1
9	N/A	COVER, LUB.OIL PUMP (ORDER REF NO.8)	1
10	CY-129900-32130	VALVE, RELIEF	1
11	CY-129001-32320	SPRING	1
12	CY-129001-32330	PLUG	1
13	CY-119717-32110	ROTOR, INNER	1
14	CY-119717-32120	ROTOR, OUTER	1
15	CY-119802-32130	SCREW, M6X16	8
16	CY-119717-01750	COVER, PUMP TIMING	1
17	CY-119660-01911	PIPE, KNOCK	4
18	CY-119624-32040	O-RING P 12.0	1
19	CY-119717-32050	O-RING, P17.0	3
20	CY-121850-51960	O-RING, F.I.PUMP	1
21	CY-26106-060122	BOLT M 6X 12 PLATED	1
22	CY-26106-060162	BOLT M 6X 16 PLATED	4
23	CY-26106-060402	BOLT M 6X 40 PLATED	4
24	CY-26106-060402	BOLT M 6X 40 PLATED	3
25	CY-26106-060602	BOLT M 6X 60 PLATED	7
26	CY-26106-060652	BOLT M 6X 65 PLATED	2
27	CY-26306-080002	NUT	3
28	CY-124160-01751	COVER,FILLER	1
29	CY-24311-000320	O-RING 1A P-32.0	1
30	CY-129150-91400	GEAR UNIT,TACHOMETER	1
32	CY-24341-000240	O-RING 1A S-24.0	1
33	CY-26106-060162	BOLT M 6X 16 PLATED	2

Copyright 2007 Cub Cadet Yanmar LLC

THIS PAGE INTENTIONALLY LEFT BLANK

Copyright 2007 Cub Cadet Yanmar LLC

FIG. 3. OIL PAN & REAR ENGINE PLATE

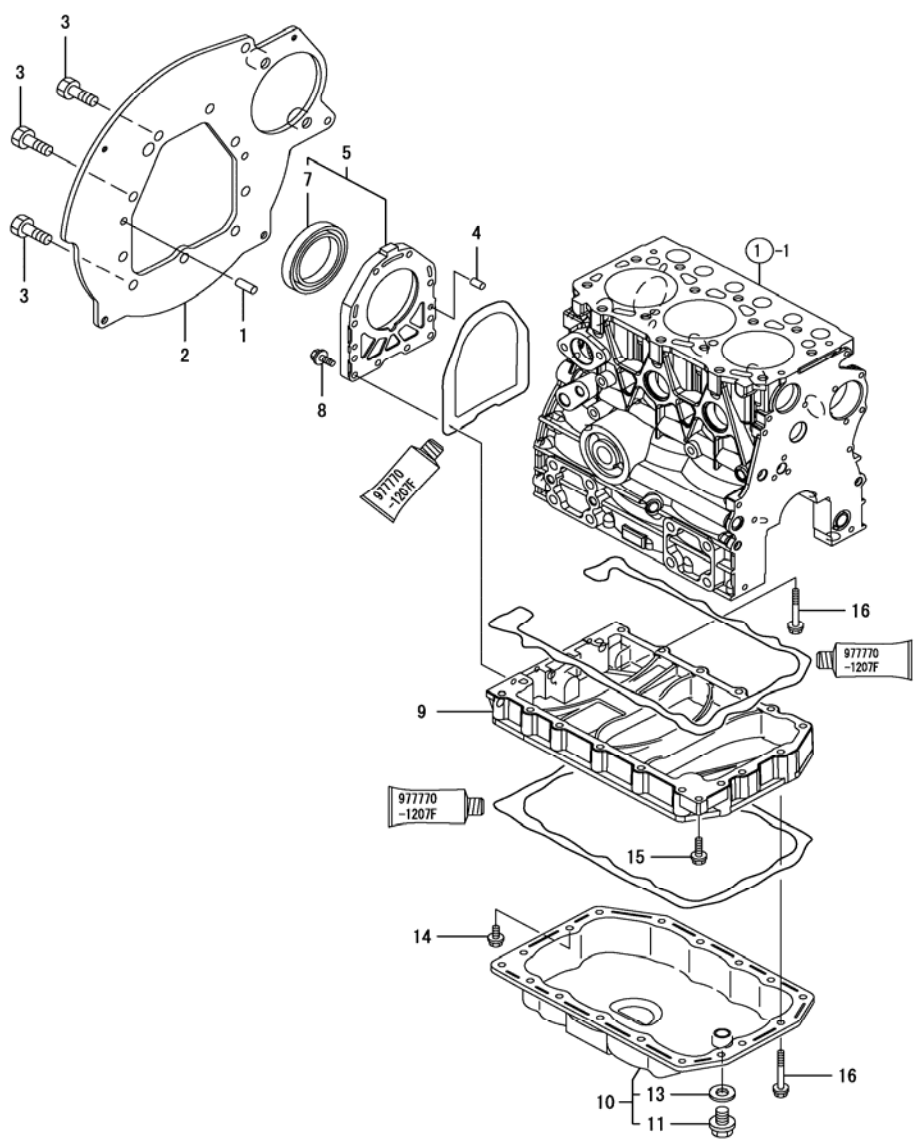

REF NO.	PART NUMBER	DESCRIPTION	QTY
1	CY-129100-01580	PARALLEL PIN 8X16	2
2	CY-119517-01600	FLANGE, MOUNT.	1
3	CY-26206-100202	BOLT M10X20	10
4	CY-119620-01620	PARALLEL PIN 6X10	2
5	CY-119527-01640	CASE ASSY, OIL SEAL	1
7	CY-124085-02220	SEAL, OIL	1
8	CY-26106-060222	BOLT M 6X 22 PLATED	10
9	CY-119515-01720	SPACER, OIL SUMP	1
10	CY-119517-01750	SUMP ASSY, LUB.OIL	1
11	CY-129054-01640	DRAIN PLUG	1
13	CY-22190-120002	SEAL WASHER 12	1
14	CY-26106-060122	BOLT M 6X 12 PLATED	1
15	CY-26106-060252	BOLT M 6X 25 PLATED	1
16	CY-26106-060452	BOLT M 6X 45 PLATED	17

Copyright 2007 Cub Cadet Yanmar LLC

FIG. 4.CYLINDER HEAD & VALVE COVER

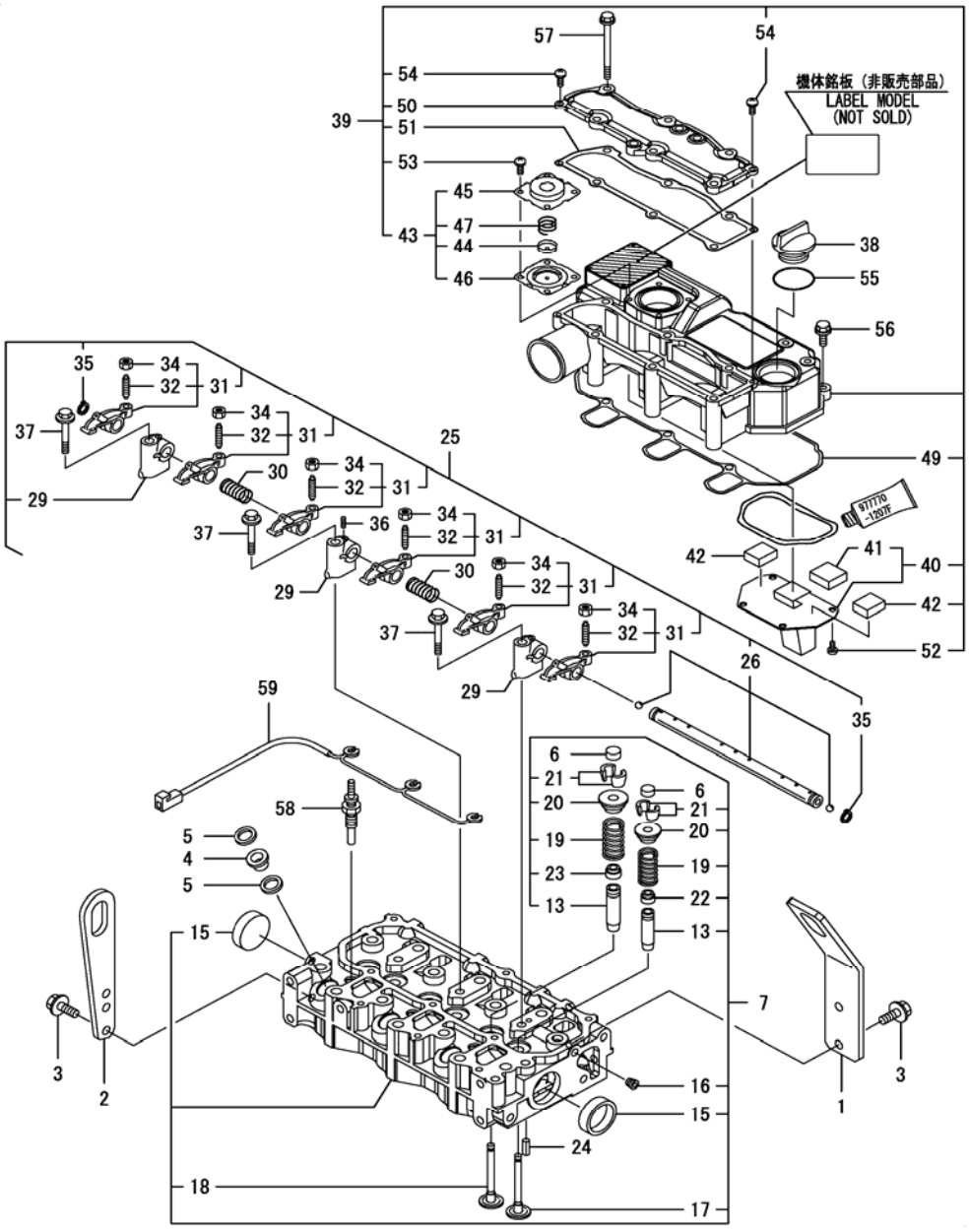

Copyright 2007 Cub Cadet Yanmar LLC

FIG. 4. CYLINDER HEAD & VALVE COVER

REF NO.	PART NUMBER	DESCRIPTION	QTY
1	CY-119517-07900	LIFTER, ENGINE	1
2	CY-129900-07900	LIFTER, ENGINE	1
3	CY-26106-080162	BOLT M 8X 16 PLATED	4
4	CY-129901-11450	PROTECTER, NOZZLE	3
5	CY-119600-11460	GASKET, NOZZLE	6
6	CY-105010-11490	CAP, VALVE	6
7	CY-119517-11740	HEAD ASSY, CYLINDER	1
13	CY-119515-11800	GUIDE, VALVE	6
15	CY-119285-11990	PLUG 35	2
16	CY-23876-005000	PLUG PT 1/16,SCREW	1
17	CY-119515-11101	VALVE, INTAKE	3
18	CY-119515-11110	VALVE, EXHAUST	3
19	CY-119717-11131	SPRING, VALVE	6
20	CY-129508-11180	RETAINER, SPRING	6
21	CY-119717-11190	COTTER, VALVE	12
22	CY-119717-11340	SEAL, VALVE STEM	3
23	CY-119717-11350	SEAL, VALVE STEM	3
24	CY-22351-060012	SPRING PIN 6X12	2
25	CY-119515-11200	SUPPORT ASSY, ARM	1
26	CY-119515-11240	SHAFT ASSY, ROCKER	1
29	CY-119717-11260	SUPPORT, ROCKER ARM	3
30	CY-119515-11280	SPRING, SHAFT	2
31	CY-119717-11650	ARM ASSY, ROCKER	6
32	CY-129150-11230	SCREW, VALVE	6
34	CY-129150-11750	NUT M8XP1.0	6
35	CY-22242-000120	CIRCLIP 12	2
36	CY-26979-050162	SCREW M 5X16	1
37	CY-26106-080402	BOLT M 8X 40 PLATED	3
38	CY-124160-01751	COVER,FILLER	1
39	CY-119515-11380	BONNET ASSY, HEAD	1
40	CY-119717-03031	PLATE, BAFFLE	1
41	CY-119717-03070	BAFFLE, BREATHER	1
42	CY-119717-03070	BAFFLE, BREATHER	2
43	N/A	DIAPHRAGM ASSY	1
44	CY-119802-03110	PLATE, DIAPHRAGM	1
45	CY-119802-03121	COVER, DIAPHRAGM	1
46	CY-119802-03131	DIAPHRAGM	1
47	CY-119802-03141	SPRING, DIAPHRAGM	1
49	CY-119515-11310	GASKET, BONNET	1
50	CY-119515-11320	COVER BONNET	1
51	CY-119515-11330	GASKET BONNET COVER	1
52	CY-22857-500100	SCREW 5X10,TAPPING	4
53	CY-22857-500100	SCREW 5X10,TAPPING	4
54	CY-22857-500160	SCREW 5X16	2
55	CY-24311-000320	O-RING 1A P-32.0	1
56	CY-26106-060202	BOLT M 6X 20 PLATED	3
57	CY-26106-060752	BOLT M 6X 75 PLATED	6
58	CY-119717-77800	PLUG, GLOW	3
59	CY-119717-77820	CONNECTOR, GLOW PLUG	1

Copyright 2007 Cub Cadet Yanmar LLC

FIG. 5. AIR CLEANER

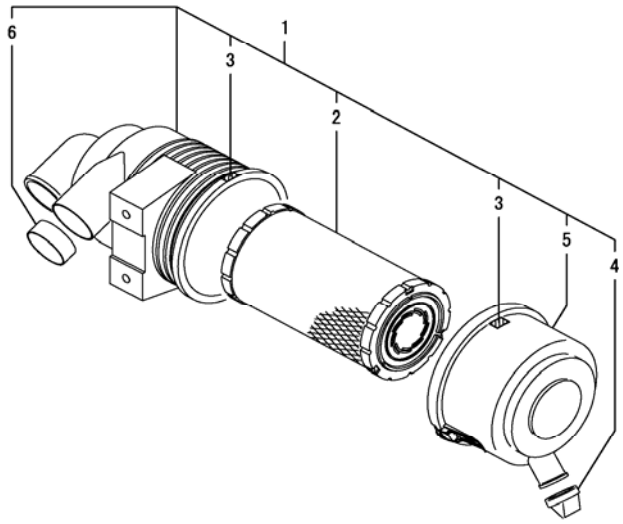

REF NO.	PART NUMBER	DESCRIPTION	QTY
1	CY-119517-12510	CLEANER ASSY, AIR	1
2	CY-119515-12520	ELEMENT 4,CLEANER	1
3	CY-129418-12530	MARK	2
4	CY-119808-12540	VALVE, UNLOADER	1
5	CY-119686-12570	COVER ASSY	1
6	CY-105027-12580	RING	1

Copyright 2007 Cub Cadet Yanmar LLC

FIG. 6. EXHAUST MANIFOLD & MUFFLER

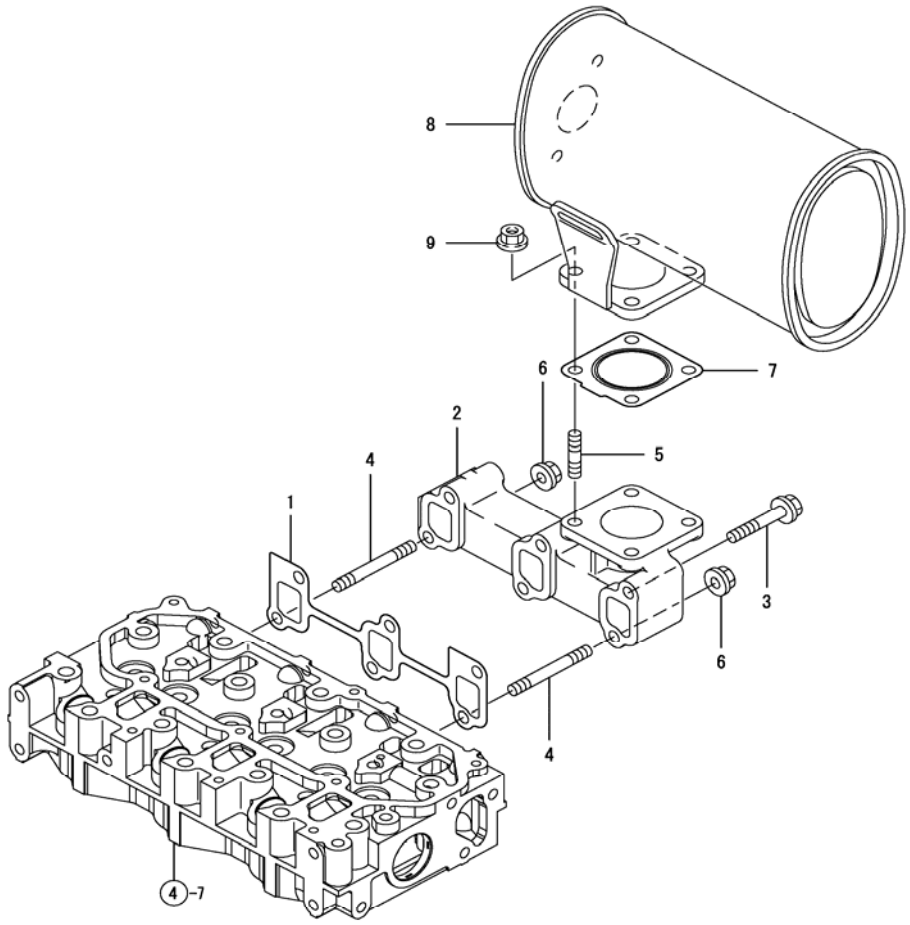

REF NO.	PART NUMBER	DESCRIPTION	QTY
1	CY-119717-13110	GASKET, MANIFOLD	1
2	CY-119734-13110	MANIFOLD, EXHAUST	1
3	CY-119802-13620	BOLT M 8X 50 PLATED	4
4	CY-119802-13750	STUD, M8X65	2
5	CY-119131-18320	BOLT M 8X 22	4
6	CY-26306-080002	NUT	2
7	CY-119515-13200	GASKET, SILENCER	1
8	CY-119517-13500	SILENCER	1
9	CY-26306-080002	NUT	4

Copyright 2007 Cub Cadet Yanmar LLC

THIS PAGE INTENTIONALLY LEFT BLANK

Copyright 2007 Cub Cadet Yanmar LLC

FIG. 7. CAMSHAFT & TIMING PARTS

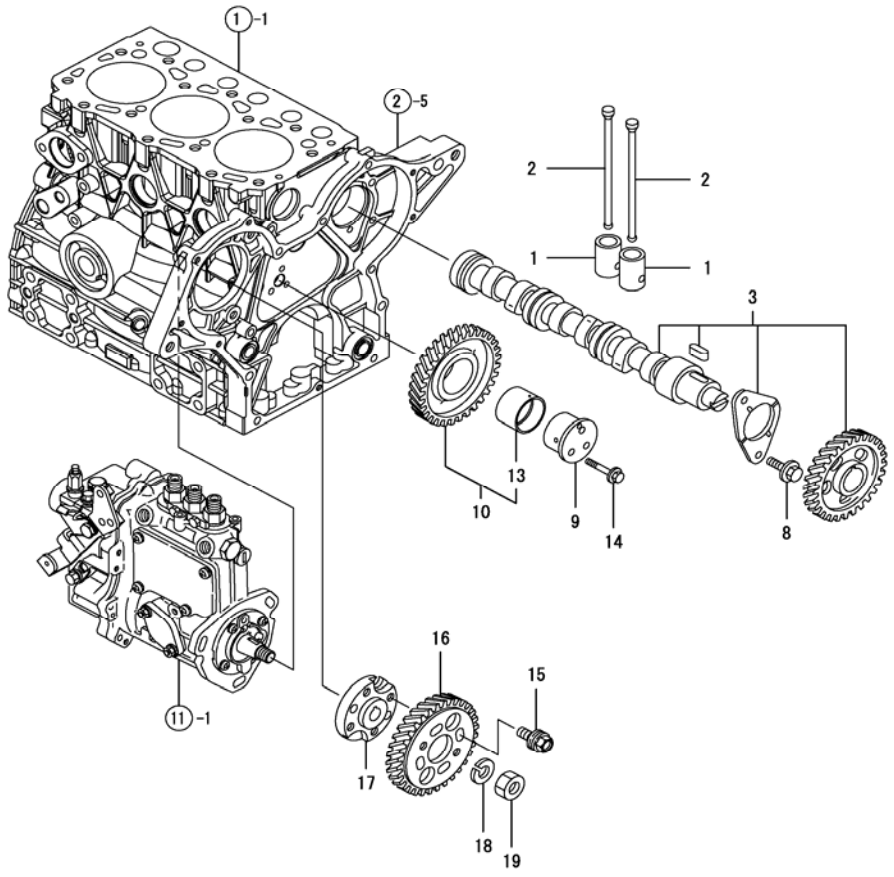

REF NO.	PART NUMBER	DESCRIPTION	QTY
1	CY-119620-14200	TAPPET	6
2	CY-119515-14400	ROD, PUSH	6
3	CY-119515-14581	CAMSHAFT ASSY	1
8	CY-26106-060122	BOLT M 6X 12 PLATED	2
9	CY-119717-25050	SHAFT, IDLE GEAR	1
10	CY-119717-25101	GEAR ASSY, IDLE	1
13	CY-119717-25911	BUSH,IDLE GEAR	1
14	CY-26106-060352	BOLT M 6X 35 PLATED	3
15	CY-129150-25301	BOLT,FI-P	4
16	CY-119717-25930	GEAR, PUMP	1
17	CY-119717-51150	FLANGE	1
18	CY-22217-120000	SPRING WASHER 12	1
19	CY-26716-120002	NUT 12	1

Copyright 2007 Cub Cadet Yanmar LLC

FIG. 8. CRANKSHAFT & PISTON

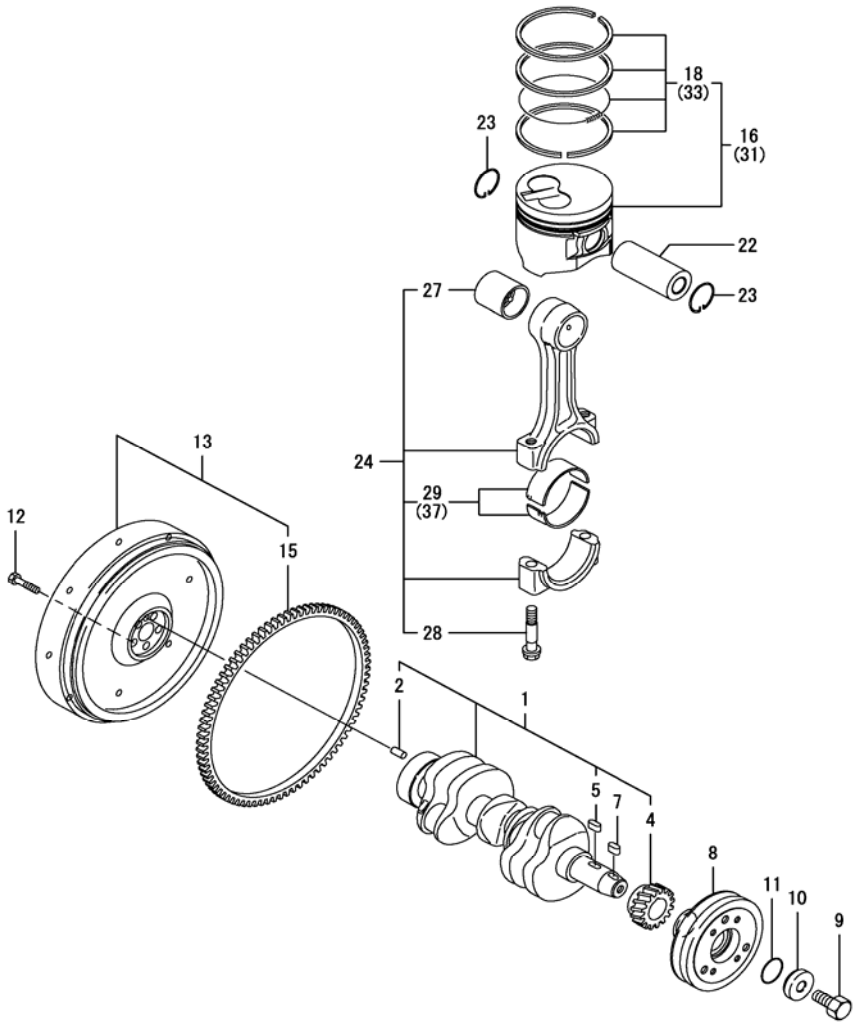

Copyright 2007 Cub Cadet Yanmar LLC

FIG. 8. CRANKSHAFT & PISTON

REF NO.	PART NUMBER	DESCRIPTION	QTY
1	CY-119515-21700	CRANKSHAFT ASSY	1
2	CY-129100-01580	PARALLEL PIN 8X16	1
4	CY-119717-21200	GEAR, CRANKSHAFT	1
5	CY-22512-040120	KEY 4X 12	1
7	CY-22512-040120	KEY 4X 12	1
8	CY-119517-21650	V-PULLEY, CRANKSHAFT	1
9	CY-119621-21680	BOLT M12X1.25,FLANGE	1
10	CY-119717-21940	WASHER,12	1
11	CY-24341-000340	O-RING 1A S-34.0	1
12	CY-121111-21501	BOLT, FLYWHEEL	5
13	CY-119517-21590	FLYWHEEL ASSY	1
15	CY-124060-21600	GEAR, RING	1
16	CY-119517-22080	PISTON ASSY	3
18	CY-119517-22500	RING SET	3
22	CY-119515-22300	PIN, PISTON	3
23	CY-22252-000220	CIRCLIP 22	6
24	CY-119515-23000	ROD ASSY, CONNECTING	3
27	CY-119717-23910	BUSH, PISTON PIN	3
28	CY-119717-23200	BOLT, CONNECTING ROD	6
29	CY-119515-23601	METAL ASSY,CRANK PIN	3
31	CY-719517-22900	PISTON ASSY(O.S=0.25	3
33	CY-719517-22550	RING SET (O.S=0.25)	3
37	CY-119515-23611	BEARING,PIN US=0.25	3

Copyright 2007 Cub Cadet Yanmar LLC

THIS PAGE INTENTIONALLY LEFT BLANK

Copyright 2007 Cub Cadet Yanmar LLC

FIG. 9. LUBRICATING PARTS

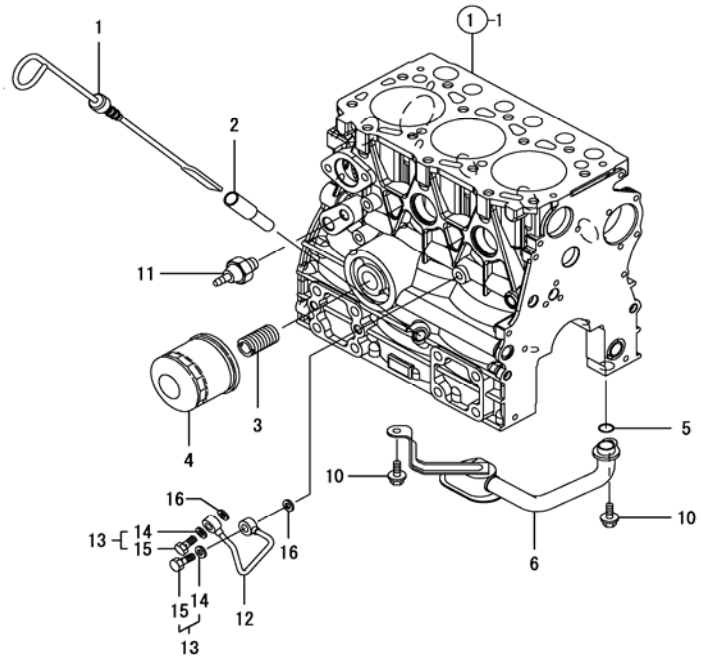

REF NO.	PART NUMBER	DESCRIPTION	QTY
1	CY-119517-34800	DIPSTICK, LUB.OIL	1
2	CY-129468-34810	GUIDE, DIPSTICK	1
3	CY-129100-35140	STUD	1
4	CY-119305-35151	FILTER ASSY, LUB.OIL	1
5	CY-119717-32060	O-RING, P15.0	1
6	CY-119534-35090	PIPE ASSY,LUB.OIL	1
10	CY-26106-060102	BOLT 6X 10 PLATED	2
11	CY-114250-39450	SWITCH,(0.5KG)L.O.	1
12	CY-119717-39210	PIPE ASSY, HYDRAULIC	1
13	CY-129005-59830	BOLT ASSY, JOINT	2
14	CY-22190-080002	SEAL WASHER 8S	2
15	CY-23857-030000	JOINT BOLT 3	2
16	CY-22190-080002	SEAL WASHER 8S	2

Copyright 2007 Cub Cadet Yanmar LLC

FIG. 10. COOLING WATER SYSTEM

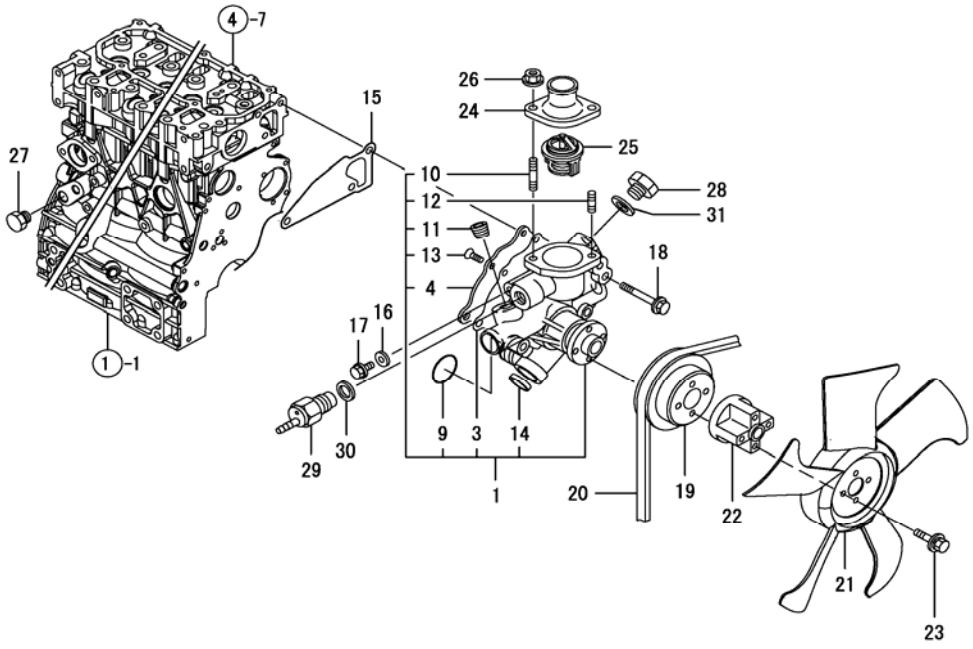

Copyright 2007 Cub Cadet Yanmar LLC

FIG. 10. COOLING WATER SYSTEM

REF NO.	PART NUMBER	DESCRIPTION	QTY
1	CY-119517-42000	PUMP ASSY, WATER	1
3	CY-119751-42030	GASKET	1
4	CY-119533-42040	COVER,WATER PUMP	1
9	CY-119717-42320	O-RING	1
10	CY-129555-44750	STUD	1
11	CY-129916-49740	PLUG, DRAIN R03	1
12	CY-26216-080202	STUD M 8X 20 PLATED	1
13	CY-26577-060122	SCREW M 6X 12	5
14	CY-27241-250000	PLUG 25	1
15	CY-119515-42020	GASKET, WATER PUMP	1
16	CY-23414-080000	GASKET 8, ROUND	1
17	CY-26106-080122	BOLT M 8X 12 PLATED	1
18	CY-26106-080502	BOLT M 8X 50 PLATED	3
19	CY-119740-42350	V-PULLEY, C.W.PUMP	1
20	CY-119865-42290	V-BELT A36.5	1
21	CY-119258-44740	FAN(D300,SUCTION	1
22	CY-119256-44760	SPACER	1
23	CY-26106-060552	BOLT M 6X 55 PLATED	4
24	CY-129350-49530	COVER, THERMOSTAT	1
25	CY-119717-49800	THERMOSTAT, 71C	1
26	CY-26306-080002	NUT	2
27	CY-171056-49120	PLUG, DRAIN	1
28	CY-121450-42450	PLUG M16	1
29	CY-121250-44901	SWITCH, THERMO(110 C)	1
30	CY-124465-44950	GASKET 16	1
31	CY-124465-44950	GASKET 16	1

Copyright 2007 Cub Cadet Yanmar LLC

FIG. 11. FUEL INJECTION PUMP

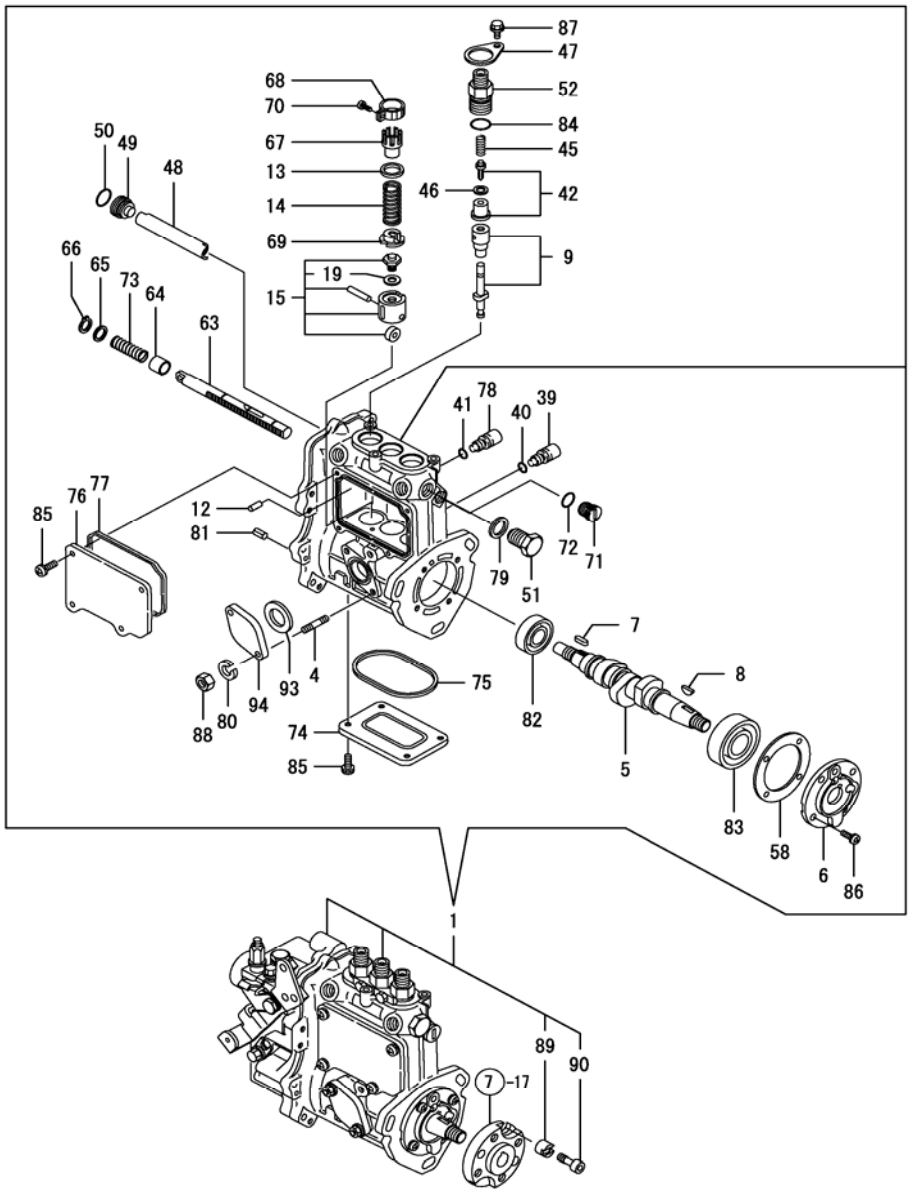

Copyright 2007 Cub Cadet Yanmar LLC

FIG. 11. FUEL INJECTION PUMP

REF NO.	PART NUMBER	DESCRIPTION	QTY
1	CY-719517-51350	FIE ASSY (3TNV72-YUKS)	1
4	CY-129155-51020	STUD, FEED PUMP	2
5	CY-119717-51030	CAMSHAFT	1
6	CY-119717-51060	SUPPORT,BEARING	1
7	CY-119717-51070	PARALLEL PIN	1
8	CY-122710-51090	KEY	1
9	CY-119515-51100	PLUNGER ASSY	3
12	CY-129155-51140	PIN, BARREL LOCKING	3
13	CY-158600-51170	SEAT SPRING	3
14	CY-119717-51190	SPRING, PLUNGER	3
15	CY-119717-51200	TAPPET ASSY	3
19	CY-129155-51600	SHIM PACK	3
39	CY-158600-51270	STOPPER	3
40	CY-129155-51280	O-RING S6	3
41	CY-129155-51280	O-RING S6	1
42	CY-119717-51300	VALVE ASSY, DELIVERY	3
45	CY-119717-51330	SPRING, DELIVERY	3
46	CY-124550-51350	GASKET, DELIVERY	3
47	CY-118400-51370	LOCKING	3
48	CY-129155-51400	DEFLECTOR	1
49	CY-158600-51410	PLUG	1
50	CY-119717-51420	O-RING	1
51	CY-158600-51420	PLUG	1
52	CY-158600-51442	VALVE ASSY, DELIVERY	3
58	CY-129155-51450	SHIM SET, ADJUSTING	1
63	CY-119717-51500	RACK, CONTROL	1
64	CY-129155-51521	BUSH, RACK	1
65	CY-129155-51530	SPACER, AUX. SPRING	1
66	CY-129155-51540	CIRCLIP	1
67	CY-129155-51550	PINION, CONTROL	3
68	CY-774307-51490	PINION	3
69	CY-119717-51180	RECEIVER,SPRING	3
70	CY-129100-51570	SCREW	3
71	CY-158600-51570	PLUG	1
72	CY-129155-51580	O-RING	1
73	CY-129155-51591	SPRING, RACK	1
74	CY-129155-51701	COVER	1
75	CY-119717-51711	PACKING	1
76	CY-119717-51750	COVER, BODY SIDE	1
77	CY-119717-51761	GASKET	1
78	CY-158600-51790	GUIDE, RACK	1
79	CY-22190-160002	SEAL WASHER 16S	1
80	CY-22217-060000	SPRING WASHER 6	2
81	CY-22351-050010	SPRING PIN 5X10	2
82	CY-24101-060034	BALL BEARING	1
83	CY-24101-063034	BALL BEARING	1
84	CY-24316-000150	O-RING 4D P15	3
85	CY-26022-050122	SCREW M 5X 12	8
86	CY-26022-060162	SCREW M 6X 16	4
87	CY-26106-050102	BOLT M 5X 10 PLATED	3
88	CY-26716-060002	NUT 6	2
89	CY-119717-51480	COLLAR. FIC FIX	1
90	CY-119717-51490	BOLT, FIXATION	1
93	CY-129155-52051	GASKET	1
94	CY-129100-52200	COVER	1

Copyright 2007 Cub Cadet Yanmar LLC

FIG. 12. GOVERNOR

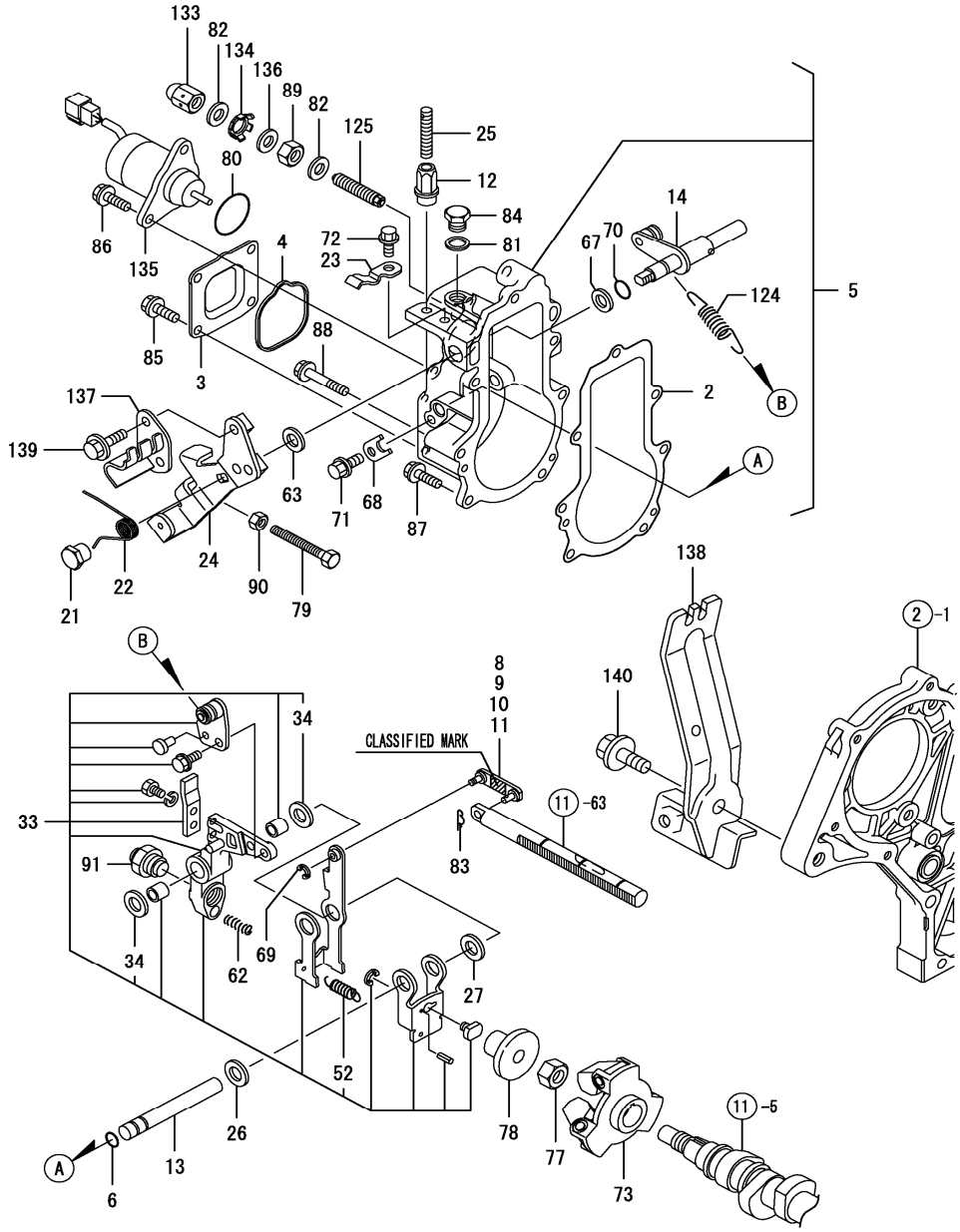

Copyright 2007 Cub Cadet Yanmar LLC

FIG. 12. GOVERNOR

REF NO.	PART NUMBER	DESCRIPTION	QTY	REF NO.	PART NUMBER	DESCRIPTION	QTY
2	CY-119717-61050	GASKET, CASE	1	71	CY-26106-060102	BOLT 6X 10 PLATED	1
3	CY-119717-61060	CASE, GOVERNOR	1	72	CY-26106-060102	BOLT 6X 10 PLATED	1
4	CY-119717-61070	GASKET, COVER	1	73	CY-119717-61200	WEIGHT ASSY	1
5	CY-119517-61100	CASE ASSY, GOVERNOR	1	77	CY-119660-61300	NUT, GOVERNOR WEIGHT	1
6	CY-129155-51280	O-RING S6	1	78	CY-129155-61341	SLEEVE(L=25.5)	1
8	CY-119717-61120	LINK, L=29.3 :3	1	79	CY-129155-61460	BOLT, IDLE LIMIT	1
9	CY-119717-61130	LINK, L=29.8 :98	1	80	CY-158552-61900	O-RING	1
10	CY-119717-61140	LINK, L=28.8 :88	1	81	CY-22190-100002	SEAL WASHER 10S	1
11	CY-119717-61150	LINK, L=30.3 :03	1	82	CY-22190-120002	SEAL WASHER 12	2
12	CY-129209-61370	NUT M6	1	83	CY-22372-040000	SNAP PIN 4	1
13	CY-129052-61390	SHAFT, GOV. LEVER	1	84	CY-23883-100002	PLUG 10	1
14	CY-119415-61400	SHAFT ASSY, CONTROL	1	85	CY-26106-060102	BOLT 6X 10 PLATED	4
21	CY-129255-61410	NUT	1	86	CY-26106-060142	BOLT M 6X 14 PLATED	2
22	CY-119534-61420	SPRING	1	87	CY-26106-060202	BOLT M 6X 20 PLATED	4
23	CY-119534-61430	RETAINER	1	88	CY-26106-060452	BOLT M 6X 45 PLATED	3
24	CY-119517-61440	LEVER, CONTROL	1	89	CY-26736-120002	NUT M12	1
25	CY-129155-61450	BOLT, REVOL. LIMIT	1	90	CY-26756-060002	LOCK NUT 6	1
26	CY-129156-61460	SHIM T=0.6	1	91	CY-119527-61550	ANGLEICH ASSY	1
27	CY-129155-61480	SPACER ASSY	1	124	CY-129573-61700	SPRING, GOVERNOR	1
33	CY-119761-61500	LEVER ASSY, GOVERNOR	1	125	CY-158601-61700	LIMITER ASSY, FUEL	1
34	CY-174307-51700	SHIM SET	2	133	CY-129209-61930	CAP NUT	1
52	CY-129486-61540	SPRING, SET	1	134	CY-129209-61970	PLATE	1
62	CY-129470-61650	SPRING, FUEL CONTROL	1	135	CY-119653-77950	SOLENOID, STOP	1
63	CY-158552-61700	SHIM ASSY	1	136	CY-23414-120016	GASKET 12	1
67	CY-158552-61710	SHIM T=1.0	1	137	CY-119517-66470	HOOK ASSY,ACCELERATOR	1
68	CY-119660-61901	RETAINER, SHAFT	1	138	CY-119517-67080	SUPPORT, ACCEL WIRE	1
69	CY-22272-000030	CIRCLIP E- 3	1	139	CY-26106-060122	BOLT M 6X 12 PLATED	2
70	CY-24341-000070	O-RING 1A S-7.0	1	140	CY-26106-100202	BOLT M10X 20 PLATED	1

Copyright 2007 Cub Cadet Yanmar LLC

FIG. 13. FUEL SUPPLY PARTS

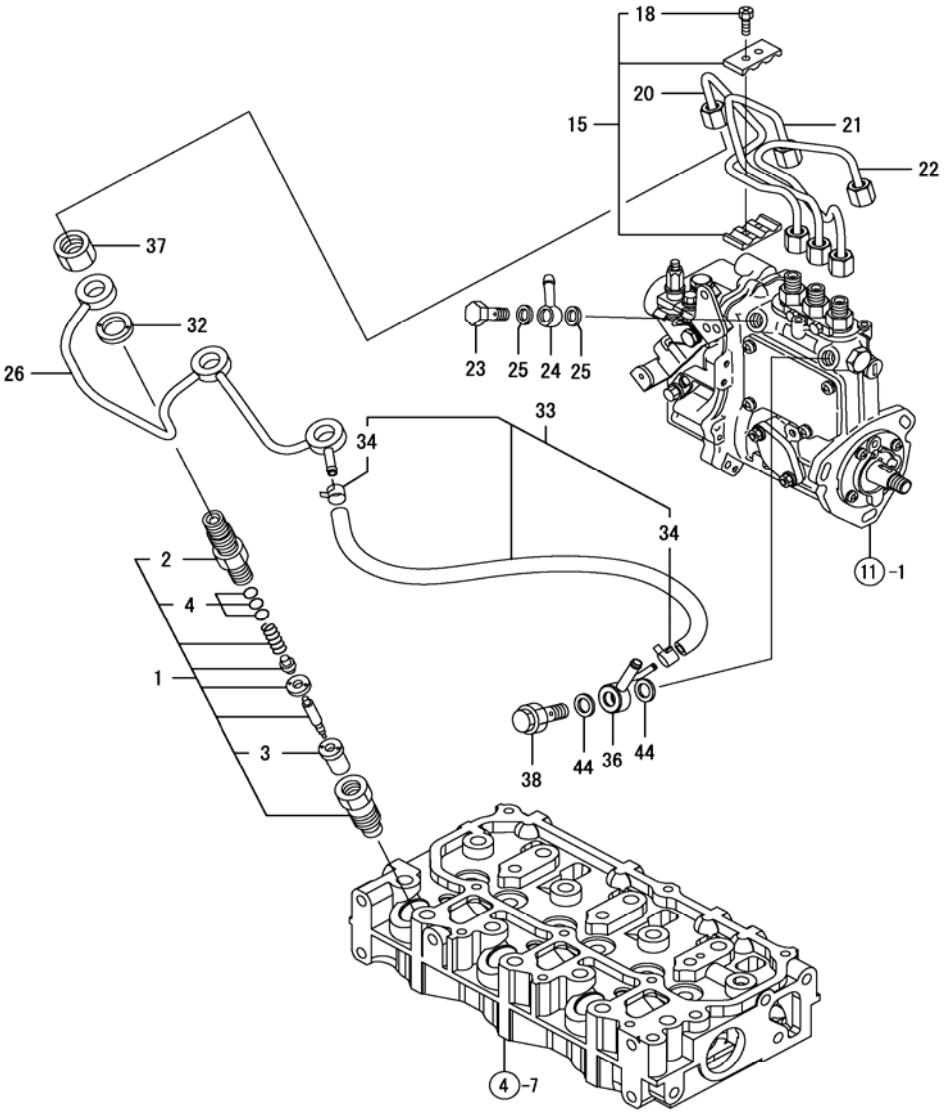

Copyright 2007 Cub Cadet Yanmar LLC

FIG. 13. FUEL SUPPLY PARTS

REF NO.	PART NUMBER	DESCRIPTION	QTY
1	CY-119515-53001	VALVE ASSY,INJECTION	3
2	CY-118200-53010	HOLDER, NOZZLE	3
3	CY-119515-53010	NOZZLE ASSY	3
4	CY-129901-53800	SHIM SET	3
15	CY-129150-59120	RETAINER, INJ. PIPE	1
18	CY-129150-59131	BOLT M4X14,HEX.SCKT.	2
20	CY-119546-59810	PIPE, FUEL INJECTION	1
21	CY-119546-59820	PIPE, FUEL INJECTION	1
22	CY-119546-59830	PIPE, FUEL INJECTION	1
23	CY-103854-39140	BOLT, PIPE JOINT	1
24	CY-101304-59020	JOINT 12, PIPE	1
25	CY-22190-120002	SEAL WASHER 12	2
26	CY-119515-59540	PIPE ASSY, RETURN	1
32	CY-129901-59560	GASKET, RETURN	3
33	CY-119416-59520	PIPE, FUEL RETURN	1
34	CY-124066-59100	CLAMP 8	2
36	CY-119840-59570	JOINT	1
37	CY-119620-59700	NUT	3
38	CY-119813-59950	VALVE ASSY, CHECK	1
44	CY-22190-120002	SEAL WASHER 12	2

Copyright 2007 Cub Cadet Yanmar LLC

FIG. 14. STARTER

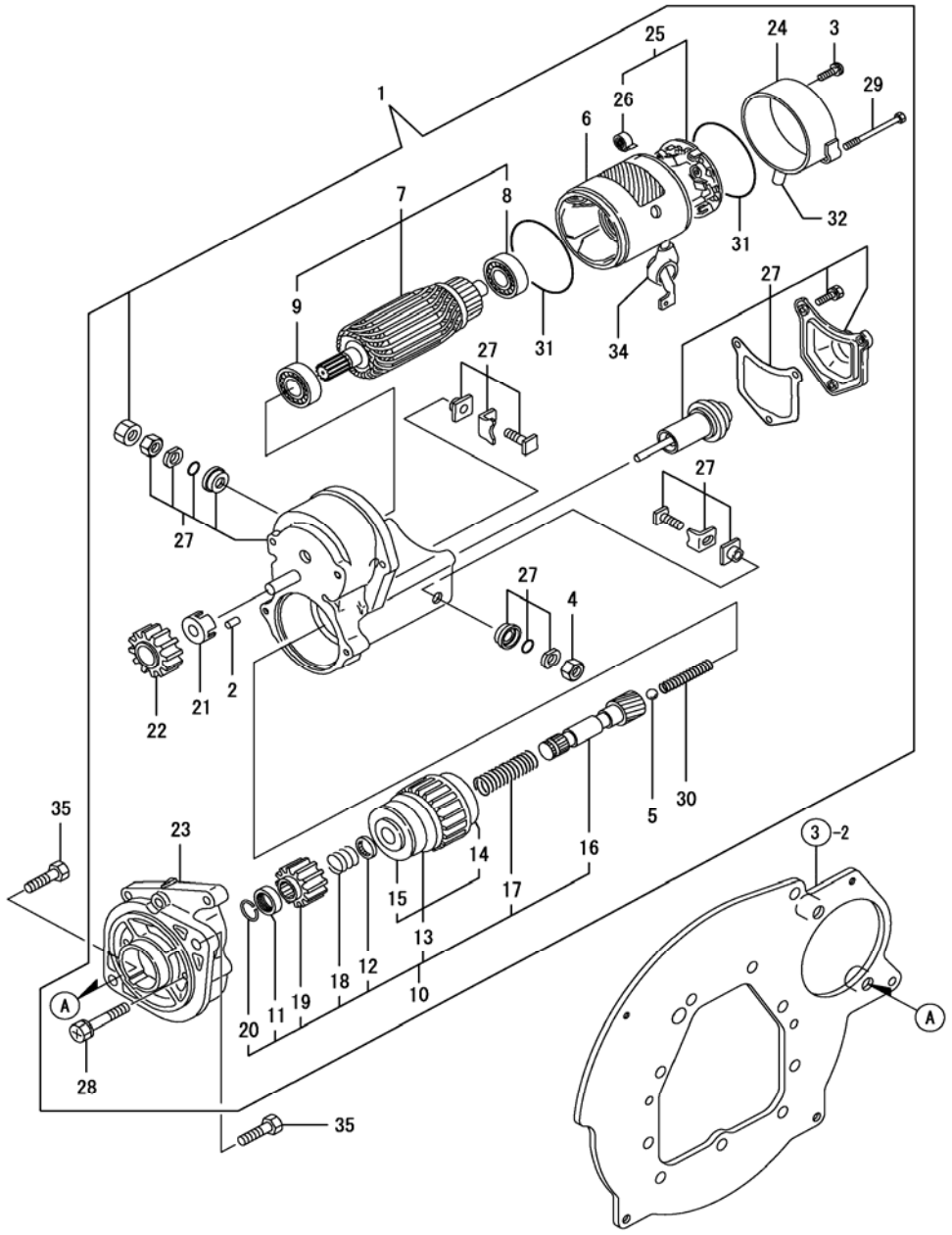

Copyright 2007 Cub Cadet Yanmar LLC

FIG. 14. STARTER

REF NO.	PART NUMBER	DESCRIPTION	QTY
1	CY-119626-77020	STARTER	1
2	CY-X0283060061	ROLLER	5
3	CY-129129-77460	SCREW	2
4	CY-X9490561370	NUT	1
5	CY-X9491200240	BALL	1
6	CY-129129-77210	YOKE ASSY	1
7	CY-129129-77220	ARMATURE ASSY	1
8	CY-129129-77230	BEARING	1
9	CY-129129-77240	BEARING	1
10	CY-X0283006990	CLUTCH SUB-ASSY	1
11	CY-X0280210230	NUT	1
12	CY-X0283270140	RETAINER	1
13	CY-129129-77390	CLUTCH ASSY, STARTER	1
14	CY-129129-77440	BEARING	1
15	CY-129129-77450	BEARING	1
16	CY-129129-77400	SHAFT	1
17	CY-129129-77410	SPRING, COIL	1
18	CY-X9491703371	SPRING, COIL	1
19	CY-X0283711660	PINION	1
20	CY-129129-77430	RING	1
21	CY-129129-77260	RETAINER	1
22	CY-129129-77270	PINION	1
23	CY-X4284000870	HOUSING	1
24	CY-129129-77290	FRAME	1
25	CY-129129-77300	HOLDER ASSY	1
26	CY-X9491730461	SPRING	4
27	CY-129407-77310	SWITCH ASSY	1
28	CY-129129-77320	BOLT	2
29	CY-129129-77330	BOLT	2
30	CY-129129-77340	SPRING	1
31	CY-129129-77350	O-RING	2
32	CY-129129-77362	COVER	1
34	CY-129129-77380	CAP	1
35	CY-26116-120302	BOLT M12X 30 PLATED	2

Copyright 2007 Cub Cadet Yanmar LLC

FIG. 15. ALTERNATOR

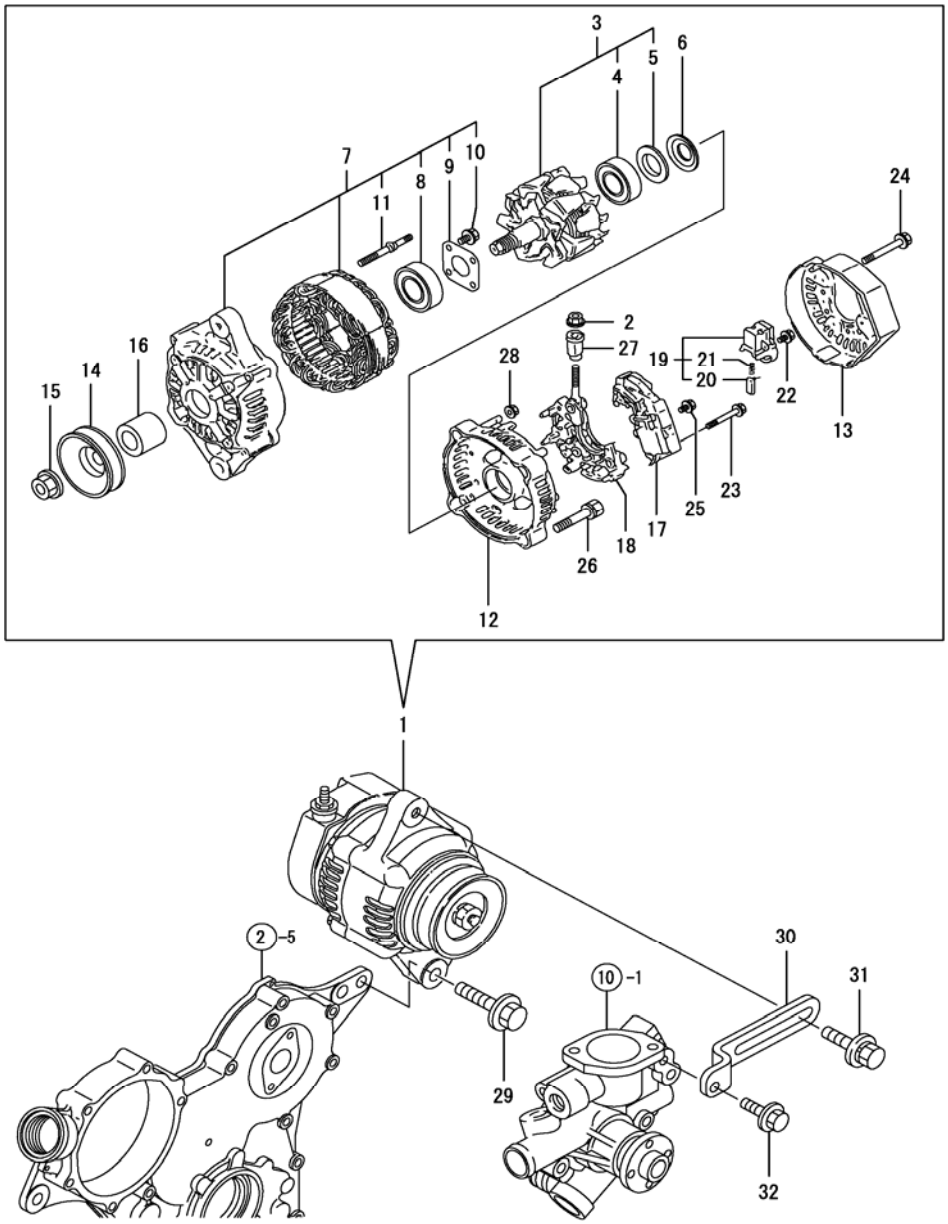

Copyright 2007 Cub Cadet Yanmar LLC

FIG. 15. ALTERNATOR

REF NO.	PART NUMBER	DESCRIPTION	QTY
1	CY-119620-77201	GENERATOR	1
2	CY-X9490561001	NUT	1
3	CY-119620-77380	ROTOR ASSY	1
4	CY-123501-79240	BEARING, BALL	1
5	CY-119620-79250	COVER, BEARING	1
6	CY-119620-79360	THRUST WASHER	1
7	CY-119620-77421	FLAME ASSY, DRIVE	1
8	CY-119620-79200	BALL BEARING	1
9	CY-119620-79210	PLATE	1
10	CY-119620-79220	SCREW	4
11	CY-119620-79230	BOLT, STUD	2
12	CY-119620-77440	FLAME ASSY, REAR	1
13	CY-119620-77450	COVER	1
14	CY-119620-77461	PULLEY	1
15	CY-119620-77471	NUT	1
16	CY-119620-77490	COLLAR	1
17	CY-119620-77710	REGULATOR ASSY	1
18	CY-119620-79260	HOLDER	1
19	CY-119620-79270	HOLDER, BRUSH	1
20	CY-119620-77480	BRUSH ASSY	2
21	CY-119620-79280	SPRING	2
22	CY-119620-79290	SCREW	6
23	CY-119620-79300	SCREW	1
24	CY-119620-79310	BOLT	3
25	CY-119620-79320	SCREW W/WASHER	2
26	CY-119620-79330	BOLT	2
27	CY-119620-79340	INSULATION BUSH	1
28	CY-119620-79350	NUT	2
29	CY-26106-100452	BOLT M10X 45 PLATED	1
30	CY-119517-77330	ADJUSTER, BELT	1
31	CY-119810-77340	BOLT	1
32	CY-26106-080202	BOLT M 8X 20 PLATED	1

Copyright 2007 Cub Cadet Yanmar LLC

TRACTOR SECTION INDEX

FIG. NO	GROUP NAME
ENGINE CONTROL SECTION	
1	ENGINE ACCESSORIES
2	ENGINE ACCESSORIES MOUNTING
3	ACCELERATOR LEVER
4	FUEL TANK
5	FUEL TANK MOUNTING
6	FUEL PIPE
FRONT AXLE SECTION	
7	FRONT FRAME
8	ENGINE MOUNT
9	CENTER PIN
10	TIE ROD
11	DRIVE PINION
12	FRONT DIFFERENTIAL GEAR
13	PROPELLER SHAFT
14	FRONT DRIVE SHAFT
15	FRONT AXLE CASE
16	FRONT GEAR CASE
17	FRONT SHAFT
18	FRONT SPINDLE
19	SHAFT COVER
20	FRONT WHEEL TIRE (BAR)
21	FRONT WHEEL TIRE (TURF)
22	FRONT WHEEL TIRE
23	HUB BOLT (FRONT)
24	STEERING WHEEL
25	COLUMN BRACKET
26	POWER STEERING VALVE
27	POWER STEERING CYLINDER
28	POWER STEERING LINES
TRANSMISSION SECTION	
29	DRIVE SHAFT
30	OIL GAUGE TUBE
31	TRANSAXLE CASE
32	OIL GAUGE
33	CENTER CASE
34	MOTOR CASE
35	FILTER
36	PUMP
37	CLUTCH SHAFT
38	P.T.O. BRAKE
39	P.T.O. SHAFT
40	POWER PUMP
41	SOLENOID VALVE
42	REAR P.T.O SHAFT
43	SHIFT
44	RANGE LEVER
45	CONTROL
46	P.T.O. LEVER
47	GEARBOX
48	2-4WD LEVER
49	MFWD SHIFT
50	HYDROSTATIC (HST) PEDAL
51	HST CRUISE LINK
52	CRUISE LEVER
53	GEAR PUMP
REAR AXLE SECTION	
54	INPUT GEAR
55	REAR DIFFERENTIAL GEAR
56	REAR AXLE HOUSING
57	DIFFERENTIAL LOCK
58	DIFFERENTIAL PEDAL
59	REAR AXLE SHAFT
60	REAR WHEEL TIRE (BAR)
61	REAR WHEEL TIRE (TURF)
62	REAR WHEEL TIRE
63	REAR HUB BOLT
64	DISC BRAKE
65	BRAKE PEDAL
66	PARKING BRAKE
HYDRAULIC CONTROL SECTION	
67	LIFT CYLINDER
68	LIFT ARM
69	CONTROL VALVE
70	STOP VALVE
71	VALVE, SCV
72	LEVER, SCV
73	HYDRAULIC CONTROL
74	HYDRAULIC PIPING
75	OIL COOLER
76	PIPING, SCV
ELECTRICAL PARTS SECTION	
77	WIRE HARNESS
78	BATTERY
79	SWITCHES
80	SEAT SWITCH
81	LAMPS
82	FRONT LAMPS
83	METER

continued on page 33…..

TRACTOR SECTION INDEX

FIG. NO	GROUP NAME
FITING SECTION	continued from page 32
84	HOOD
85	DASHBOARD A
86	DASHBOARD B
87	FENDER
88	LEVER GUIDE
89	FOOTREST STAY
90	FOOTREST
91	SEAT
92	SEAT STAY
93	LABEL 1
94	LABEL 2
95	LABEL 3
96	LABEL 4
97	CYLINDER BLOCK
HITCH SECTION	
98	THREE POINT LINK
99	P.T.O. SAFETY COVER
100	ROPS UPPER
101	LOWER FRAME
102	SMV
OPTIONAL SECTION	
103	FRONT HITCH

NOTES:

FIG. 1. ENGINE ACCESSORY

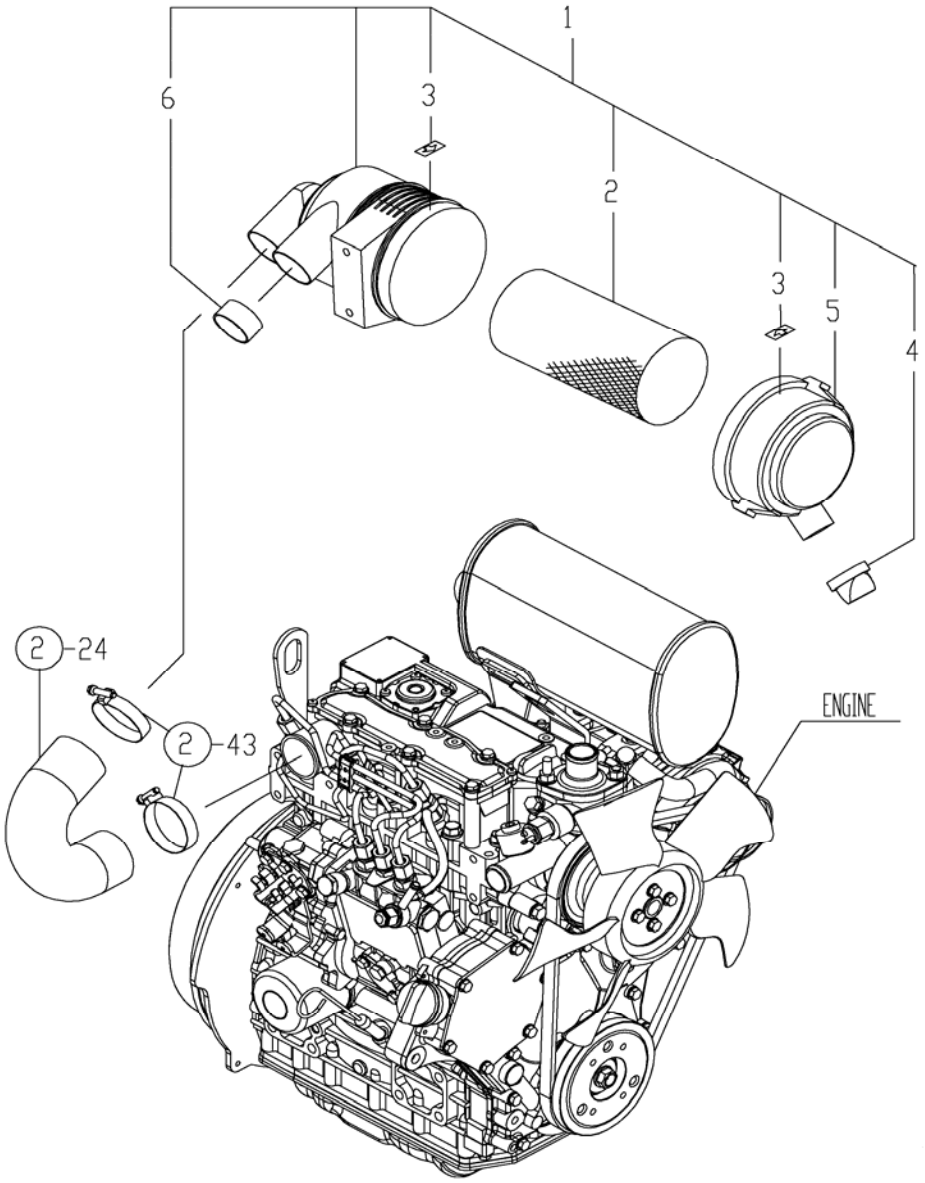

REF NO.	PART NUMBER	DESCRIPTION	QTY
1	CY-119517-12510	CLEANER ASSY, AIR	1
2	CY-119515-12520	ELEMENT 4, CLEANER	1
3	CY-129418-12530	LABEL, MARK	2
4	CY-119808-12540	VALVE, UNLOADER	1
5	CY-119686-12570	COVER ASSY	1
6	CY-105027-12580	RING	1

Copyright 2007 Cub Cadet Yanmar LLC

FIG. 2. ENGINE ACCESSORY MOUNTING

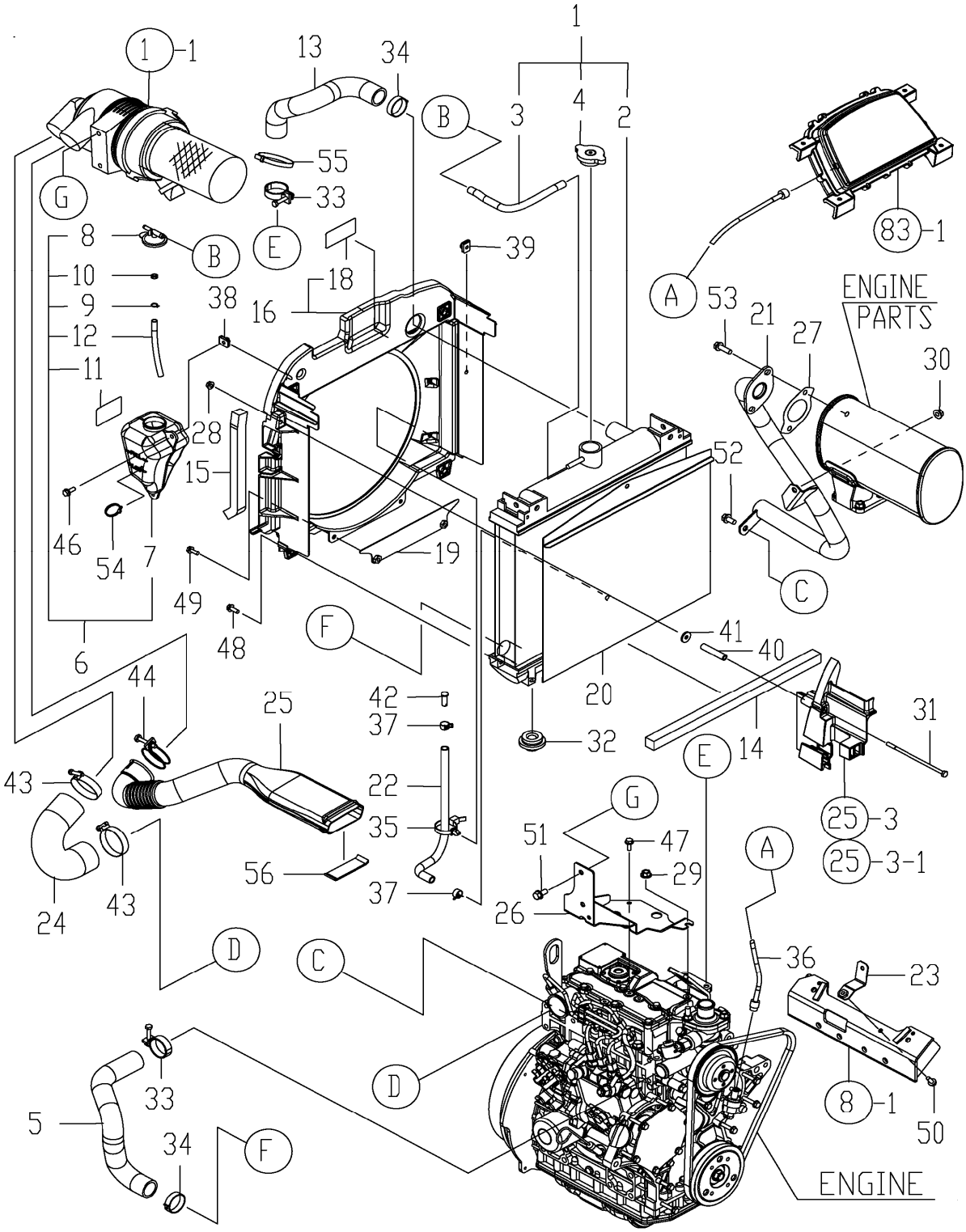

Copyright 2007 Cub Cadet Yanmar LLC

FIG. 2. ENGINE ACCESSORY MOUNTING

REF NO.	PART NUMBER	DESCRIPTION	QTY
1	CY-1A7880-00600	RADIATOR ASSY	1
2	(ORDER REF NO.1)	RADIATOR	1
3	CY-1A7880-00630	HOSE,TANK	1
4	CY-129107-44590	CAP, RADIATOR	1
5	CY-198162-00720	PIPE, WATER 66	1
6	CY-1A7880-01350	TANK ASSY,COOLANT	1
7	(ORDER REF NO.6)	TANK,COOLANT	1
8	CY-121450-44531	CAP	1
9	CY-124450-44560	RETAINER, PIPE	1
10	CY-121470-44581	GASKET	1
11	CY-129410-44540	LABEL-OVERFLOW TAN	1
12	CY-1A7880-01410	HOSE, COOLING WATEF	1
13	CY-1A7880-01440	SEAL,RADIATOR	1
14	CY-1A7880-01460	SEAL,SHROUD LOWER	2
15	CY-1A7880-01500	SHROUDM ASSY,FAN	1
17	CY-1A7880-65620	LABEL,WARNING,FAN	1
18	CY-1A7880-01520	PLATE ASSY,SHROUD	1
19	CY-1A7880-01560	SCREEN,RADIATOR	1
20	CY-1A7880-03110	PIPE, EXHAUST	1
21	CY-1A7510-04430	HOSE	1
23	CY-1A7880-05410	INSHULATOR	1
24	CY-1A7880-06010	HOSE,AIR INTAKE	1
25	CY-1A7880-06150	AIR INTAKE PIPE	1
26	CY-1A7880-06210	BRACKET,AIR CLEANER	1
27	CY-129052-13550	GASKET, EXHAUST	1
28	CY-194990-22130	NUT, M6	2
29	CY-194990-22140	NUT, M8	1

REF NO.	PART NUMBER	DESCRIPTION	QTY
30	CY-194990-22140	NUT, M8	1
31	CY-1A7880-01650	BOLT M6X135	2
32	CY-119255-44660	RUBBER, RADIATOR	2
33	CY-121267-49500	BAND, HOSE 38	2
34	CY-175022-49730	CLIP, HOSE 31.0	2
35	CY-194680-51670	CLAMP	2
36	CY-1A6680-56920	CABLE, HOUR METER	1
37	CY-114270-59010	CLAMP, HOSE 12	2
38	CY-198071-61890	NUT, M6	2
39	CY-198071-61890	NUT, M6	1
40	CY-198461-87590	COLLER, 6.5X10X52	2
41	CY-22157-060000	WASHER, 6	2
42	CY-22487-080200	PIN, 8 X 20	1
43	CY-23000-054000	CLAMP, HOSE 54	2
44	CY-23010-050000	CLAMP, HOSE 50	1
46	CY-26106-060162	BOLT, 6 X 16	2
47	CY-26106-060162	BOLT, 6 X 16	2
48	CY-26106-060162	BOLT, 6 X 16	4
49	CY-26106-060162	BOLT, 6 X 16	2
50	CY-26106-060162	BOLT, 6 X 16	1
51	CY-26106-080162	BOLT, 8 X 16	2
52	CY-26106-080162	BOLT, 8 X 16	1
53	CY-26106-080252	BOLT, 8 X 25	2
54	CY-1A1380-55310	CLAMP, WIRE	1
55	CY-29622-250001	BAND, 250	1
56	CY-198162-61370	SEAL-AIR INTAKE PIPE	1

Copyright 2007 Cub Cadet Yanmar LLC

FIG. 3. ACCELERATOR LEVER

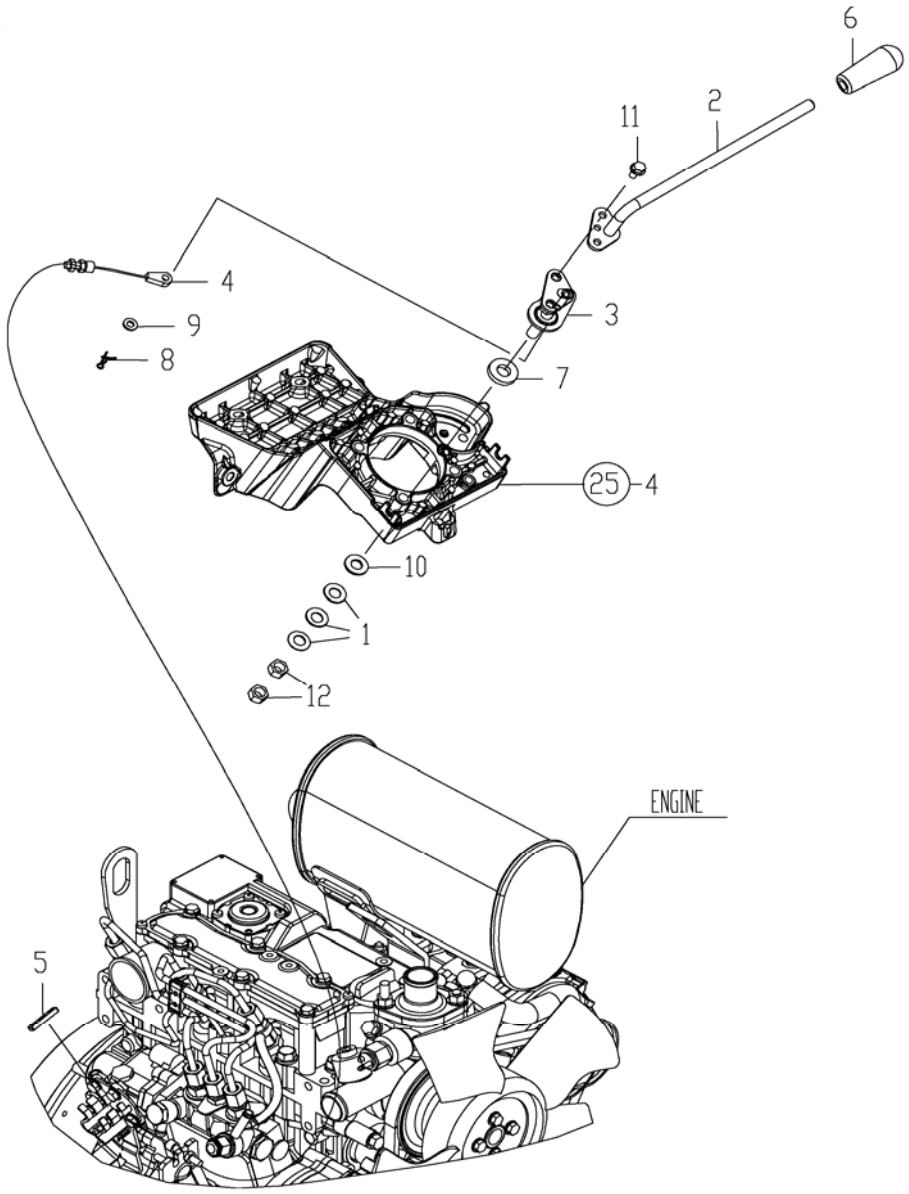

REF NO.	PART NUMBER	DESCRIPTION	QTY
1	CY-194740-00160	WASHER,CONICAL 10	3
2	CY-1A7880-01060	CONTROL LEVER,HEAD	1
3	CY-1A7880-01110	CONTROL LEVER,BASE	1
4	CY-1A7880-01150	CABLE ASSY,CONTROL	1
5	CY-198071-01160	RUBBER,	1
6	CY-198253-01190	KNOB, ACCEL. LEVER	1
7	CY-1C6900-48251	SPACER, 13X26X5	1
8	CY-1C6281-52310	PIN, SNAP	1
9	CY-22137-060000	WASHER, 6	1
10	CY-22137-100000	WASHER, 10	1
11	CY-26106-060122	BOLT, 6 X 12	2
12	CY-26716-100002	NUT, 10	2

Copyright 2007 Cub Cadet Yanmar LLC

FIG. 4. FUEL TANK

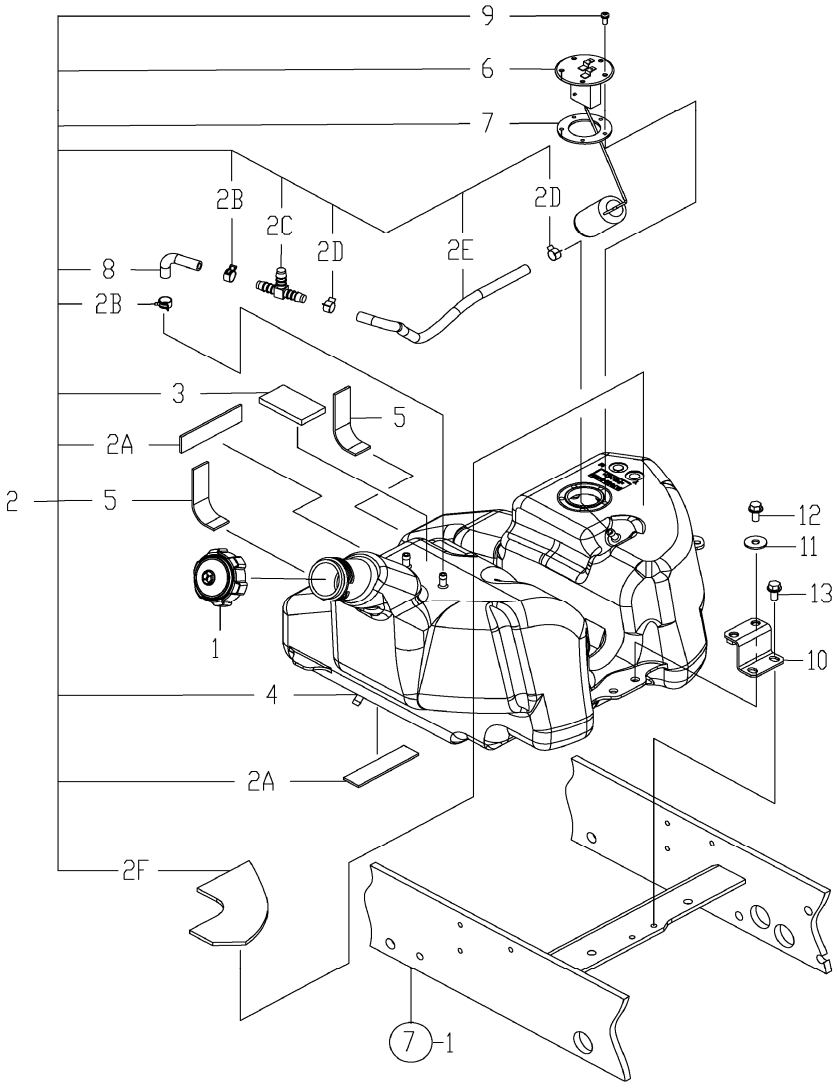

REF NO.	PART NUMBER	DESCRIPTION	QTY
1	CY-1A7880-04090	CAP, FUEL TANK	1
2	CY-1A7880-04100	TANK ASSY, FUEL	1
2A	CY-198165-04380	RUBBER 100 X 25 X 3	2
2B	CY-114270-59010	CLAMP, 12	2
2C	CY-119629-59910	JOINT, 3 WAY	1
2D	CY-23080-012000	CLAMP, HOSE 12	2
2E	CY-23980-730260	HOSE, 7.3 X 260	1
2F	CY-1A7880-04040	CUSHION,FUEL TANK RH	1
3	CY-1A7880-04080	CUSHION,FUEL TANK	1
4	N/A	TANK, FUEL (ORDER REF NO.2)	1
5	CY-1A7880-04050	CUSHION, FUEL TANK SI	2
6	CY-1A7880-56600	SENDER ASSY,FUEL	1
7	CY-198200-56630	GASKET, FUEL GAUGE	1
8	CY-198448-04270	HOSE, RETURN	1
9	CY-26022-050122	SCREW, 5 X 12	5
10	CY-1A7880-04210	STAY,FO TANK	1
11	CY-22157-080000	WASHER, 8	2
12	CY-26106-080162	BOLT, 8 X 16	2
13	CY-26106-080162	BOLT, 8 X 16	2

Copyright 2007 Cub Cadet Yanmar LLC

THIS PAGE INTENTIONALLY LEFT BLANK

Copyright 2007 Cub Cadet Yanmar LLC

FIG. 5. FUEL TANK MOUNTING

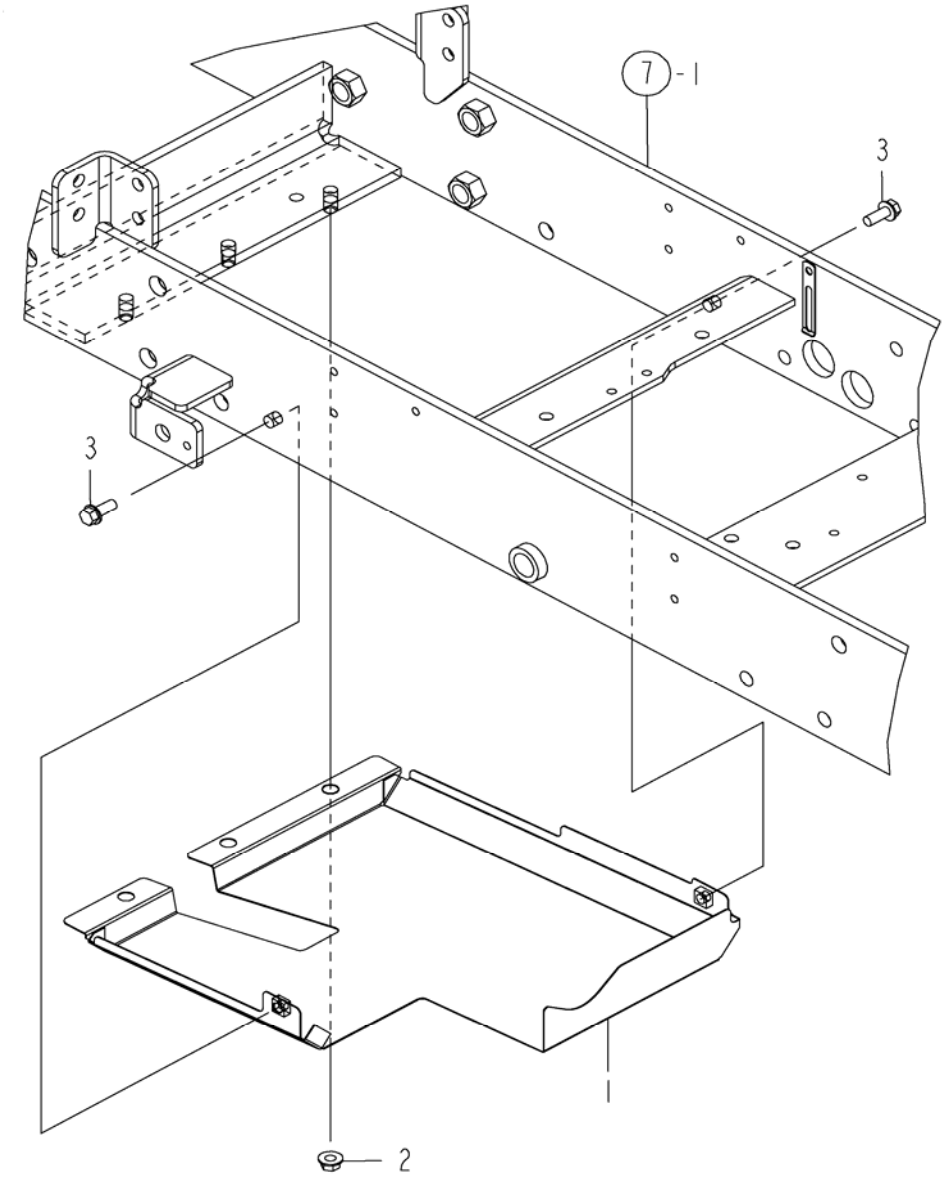

REF NO.	PART NUMBER	DESCRIPTION	QTY
1	CY-1A7880-04300	COVER ASSY,LOWER	1
2	CY-194990-22140	NUT, M8	3
3	CY-26106-080202	BOLT, 8 X 20	2

Copyright 2007 Cub Cadet Yanmar LLC

FIG. 6. FUEL PIPE

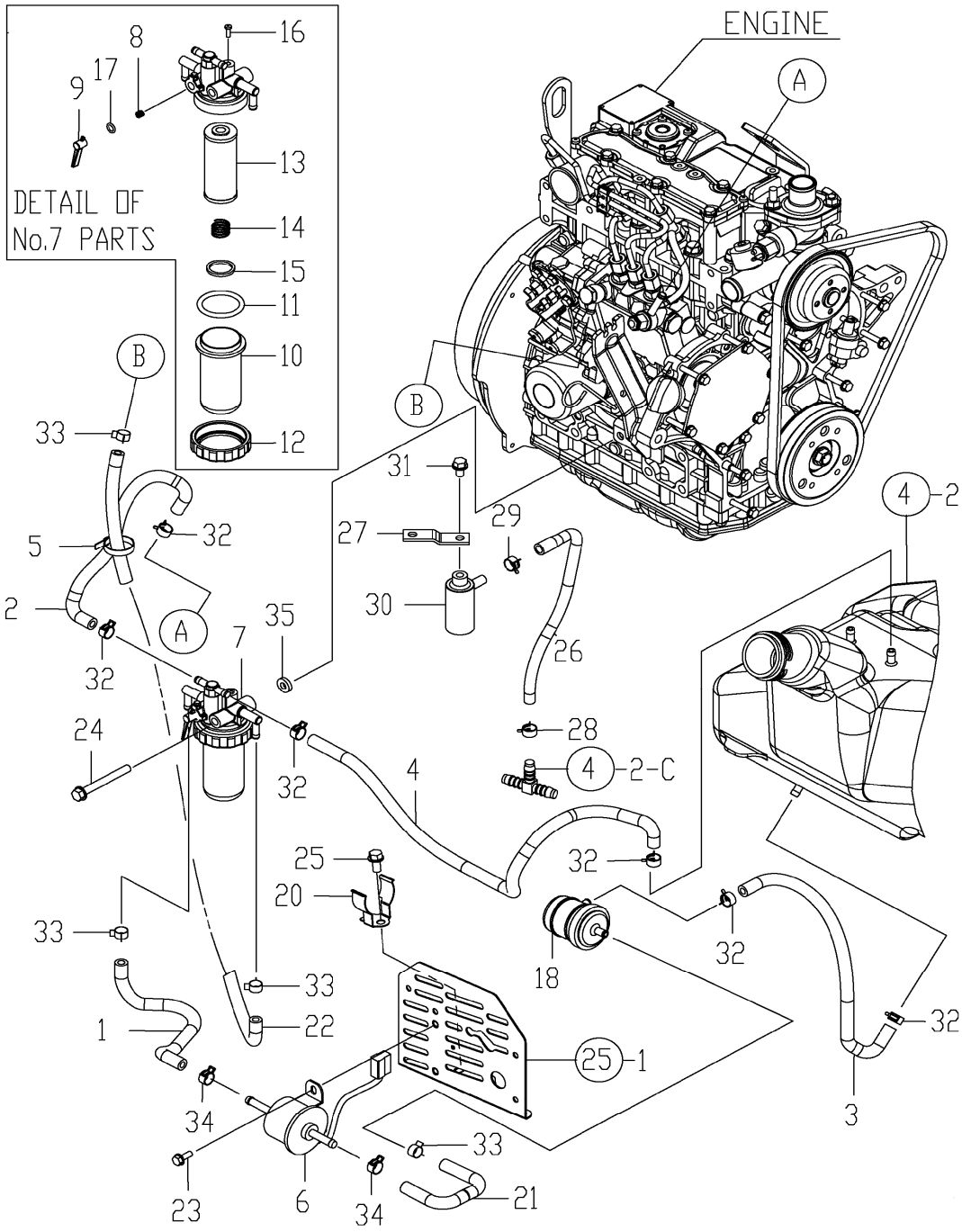

Copyright 2007 Cub Cadet Yanmar LLC

FIG. 6. FUEL PIPE

REF NO.	PART NUMBER	DESCRIPTION	QTY
1	CY-198200-04310	HOSE,FILTER	1
2	CY-1A7880-04410	HOSE, FUEL	1
3	CY-1A7510-04430	HOSE	1
4	CY-1A7880-04430	HOSE, FUEL	1
5	CY-198220-51870	CLAMP, 200	1
6	CY-119225-52102	PUMP, FUEL FEED	1
7	CY-129053-55620	FILTER ASSY, FUEL	1
8	CY-104200-55330	SPRING, TAPER VALVE	1
9	CY-119810-55340	LEVER	1
10	CY-129107-55510	CUP	1
11	CY-102103-55520	O-RING	1
12	CY-110250-55610	RING, RETAINING	1
13	CY-119810-55650	ELEMENT, FILTER	1
14	CY-121257-55720	SPRING, SCREEN	1
15	CY-121257-55731	FLOAT	1
16	CY-104200-55750	SCREW,COCK HANDLE M4	1
17	CY-24311-240100	PACKING, P 10A	1
18	CY-129052-55630	FILTER, FUEL OIL	1
19	CY-124766-59050	CLAMP, HOSE 12	12
20	CY-198072-04320	CLAMP, FILTER	1
21	CY-23980-730150	HOSE, 7.3 X 150	1
22	CY-23980-730330	HOSE, 7.3 X 330	1
23	CY-26106-060162	BOLT, 6 X 16	2
24	CY-26106-080702	BOLT, 8 X 65	1
25	CY-26106-080162	BOLT, 8 X 16	1
26	CY-1A7880-04270	HOSE, AIR VENT	1
27	CY-194312-39480	SUPPORT BREATHER	1
28	CY-114270-59010	CLAMP, 12	1
29	CY-114270-59010	CLAMP, 12	1
30	CY-194205-63550	BREATHER, AIR	1
31	CY-26106-080122	BOLT, 8 X 12	1
32	CY-114270-59010	CLAMP, 12	6
33	CY-23080-012000	CLAMP, HOSE	4
34	CY-14270-59010	CLAMP, 12	2
35	CY-194145-22430	SPACER 18	1

Copyright 2007 Cub Cadet Yanmar LLC

FIG. 7. FRAME

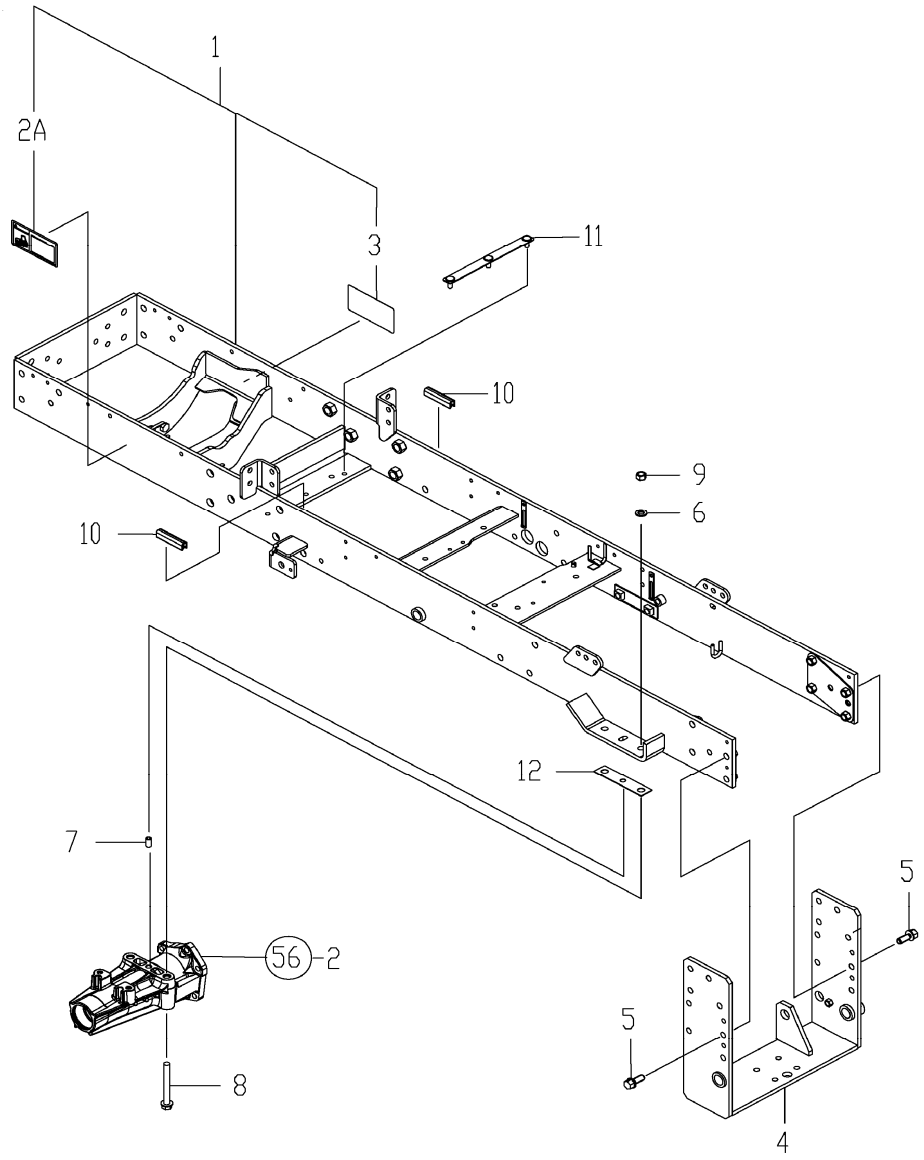

REF NO.	PART NUMBER	DESCRIPTION	QTY
1	CY-1A7880-10090	SCT FRAME M ASSY	1
2A	CY-1A8160-65310	LABEL, WARNING STOP	1
3	CY-1A8160-65300	LABEL,DANGER,START	1
4	CY-1A7880-10500	FRAME,LOWER CMP	1
5	CY-1A6770-85920	BOLT, M12X30	8
6	CY-22217-120000	WASHER, 12	4
7	CY-22351-100020	PIN, 10.0A X 20	2
8	CY-26106-121002	BOLT, 12 X 100	4
9	CY-26716-120002	NUT, 12	4
10	CY-1A7880-10410	TRIM	2
11	CY-1A7880-10430	PLATE, FUEL TANK COVER	1
12	CY-1A7880-10040	SHIM, 1.2	2

Copyright 2007 Cub Cadet Yanmar LLC

FIG. 8. ENGINE MOUNT

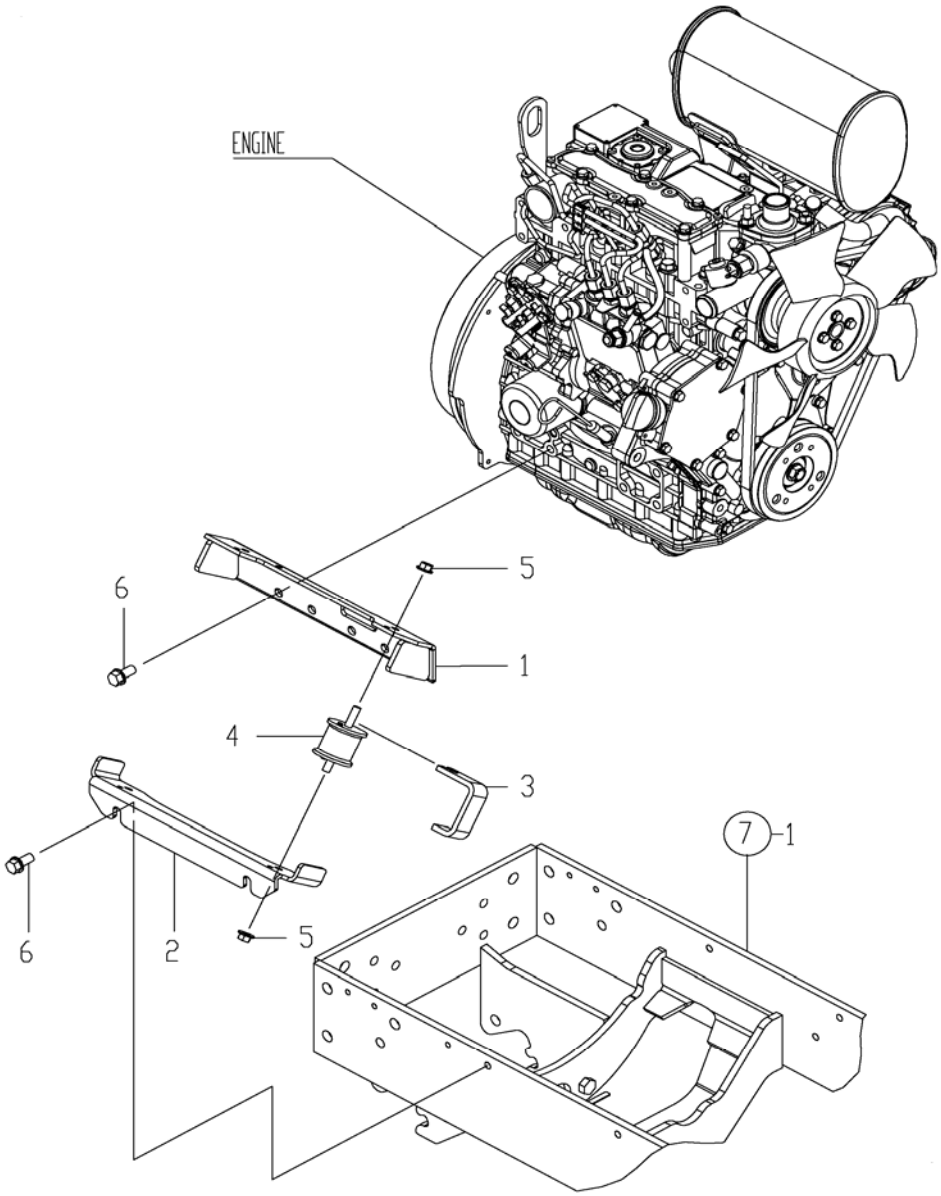

REF NO.	PART NUMBER	DESCRIPTION	QTY
1	CY-1A7880-10800	STAY CMP,ENGINE	2
2	CY-1A7880-10900	MOUNT STAY, FRAME	2
3	CY-1A7880-10950	STOPPER	2
4	CY-1A7130-11790	RUBBER MOUNT	4
5	CY-194990-22140	NUT, M8	8
6	CY-26106-100202	BOLT, 10 X 20	10

Copyright 2007 Cub Cadet Yanmar LLC

FIG. 9. CENTER PIN

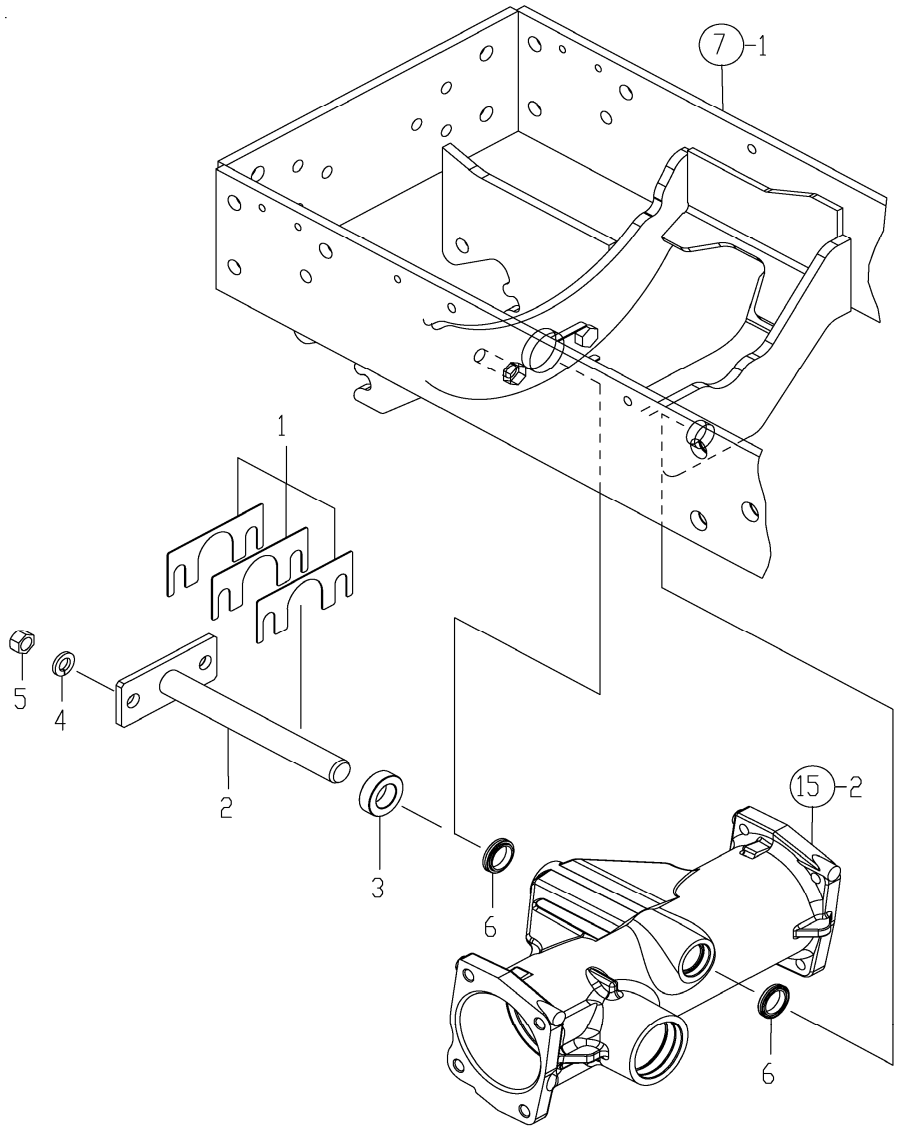

REF NO.	PART NUMBER	DESCRIPTION	QTY
1	CY-198165-11500	SHIM SET, CENTER PIN	1
2	CY-1A7880-11510	PIN ASSY, CENTER	1
3	CY-1A7880-11550	COLLAR,22X38X11.5	1
4	CY-22217-120000	WASHER, 12	2
5	CY-26716-120002	NUT, 12	2
6	CY-1A7880-11560	DUST SEAL 22 X 30 X 6	2

Copyright 2007 Cub Cadet Yanmar LLC

FIG. 10. TIE ROD

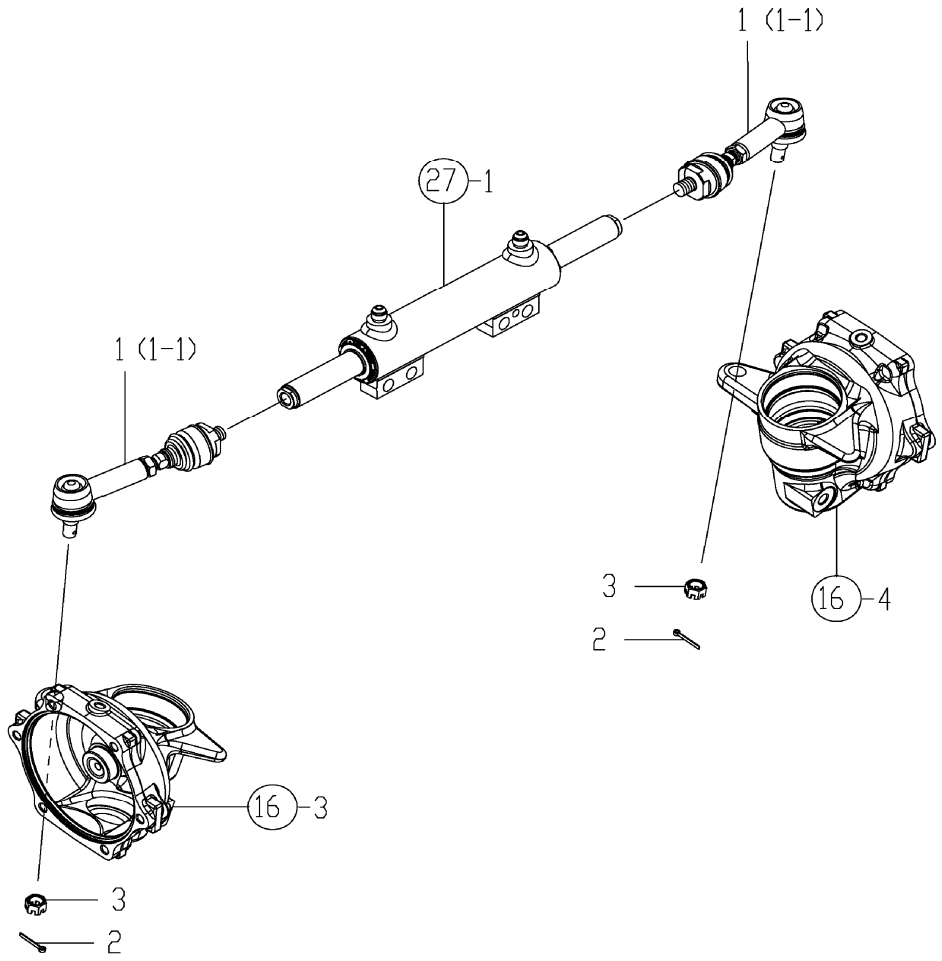

REF NO.	PART NUMBER	DESCRIPTION	QTY
1	CY-1A7880-12301	TIEROD 132 ASSY xxxxx & Before	2
1-1	CY-1A7880-12302	TIEROD 132 ASSY xxxxx & After	2
2	CY-22417-320250	PIN, 3.2 X 25	2
3	CY-194730-57241	NUT, 12	2

Copyright 2007 Cub Cadet Yanmar LLC

FIG. 11. DRIVE PINION

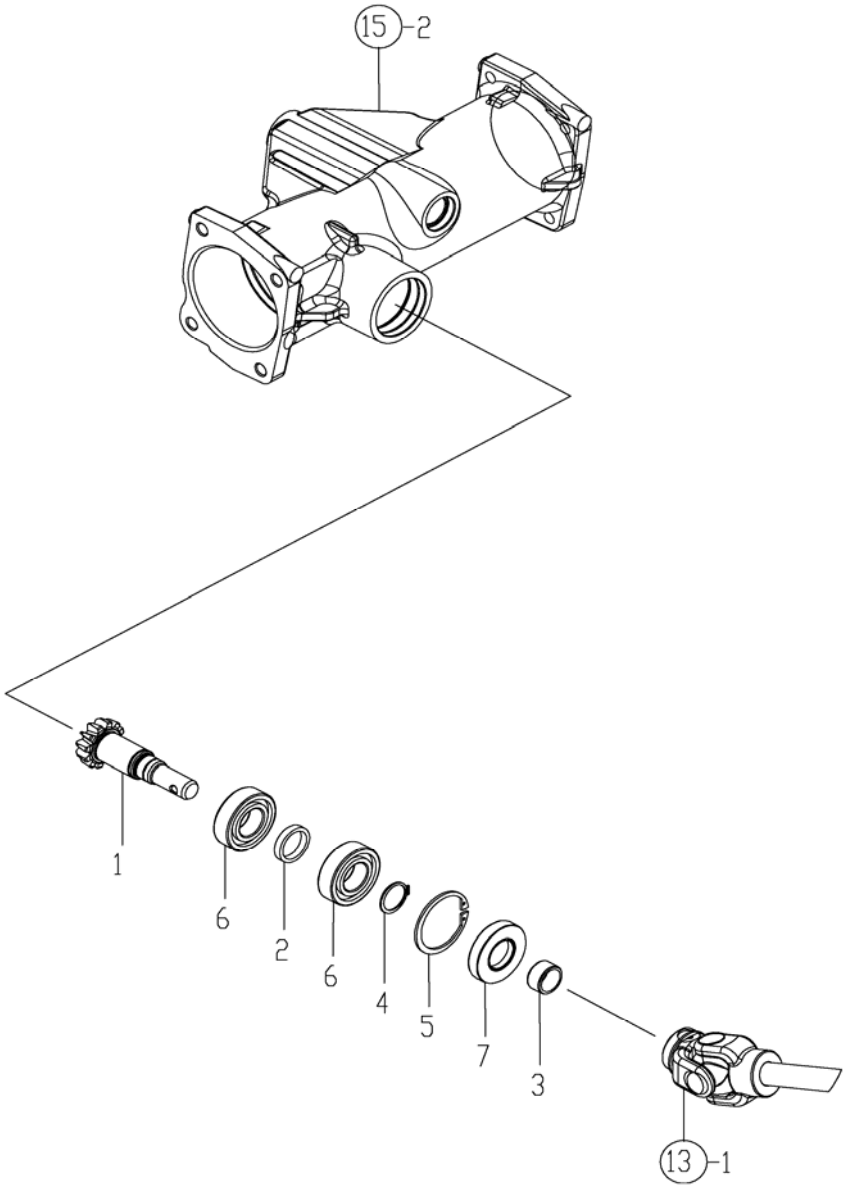

REF NO.	PART NUMBER	DESCRIPTION	QTY
1	CY-1A7130-13120	SHAFT, INPUT	1
2	CY-1A7130-13130	COLLAR 30X25X5.7	1
3	CY-1E4760-73240	SLEEVE, 202513	1
4	CY-22242-000240	RING, 24	1
5	CY-22252-000520	RING, 52	1
6	CY-24101-062054	BEARING, 6205 NTN	2
7	CY-24421-255210	SEAL, TC255210	1

Copyright 2007 Cub Cadet Yanmar LLC

FIG. 12. FRONT DIFFERENTIAL GEAR

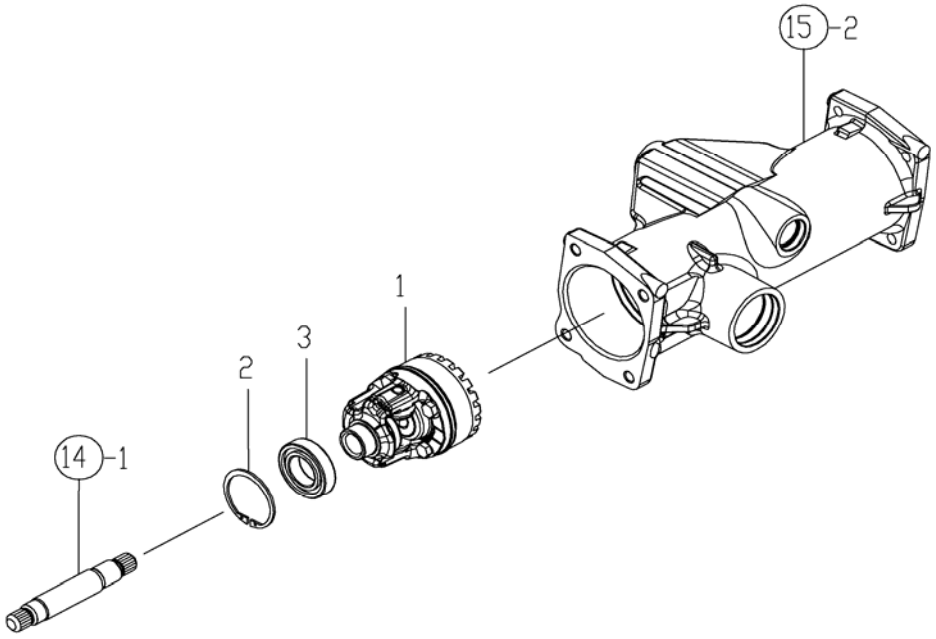

REF NO.	PART NUMBER	DESCRIPTION	QTY
1	CY-1A7880-13150	GEAR,CMP,DEFF	1
2	CY-22252-000550	RING, 55	1
3	CY-24101-060064	BEARING, 6006 NTN	1

Copyright 2007 Cub Cadet Yanmar LLC

FIG. 13. PROPELLER SHAFT

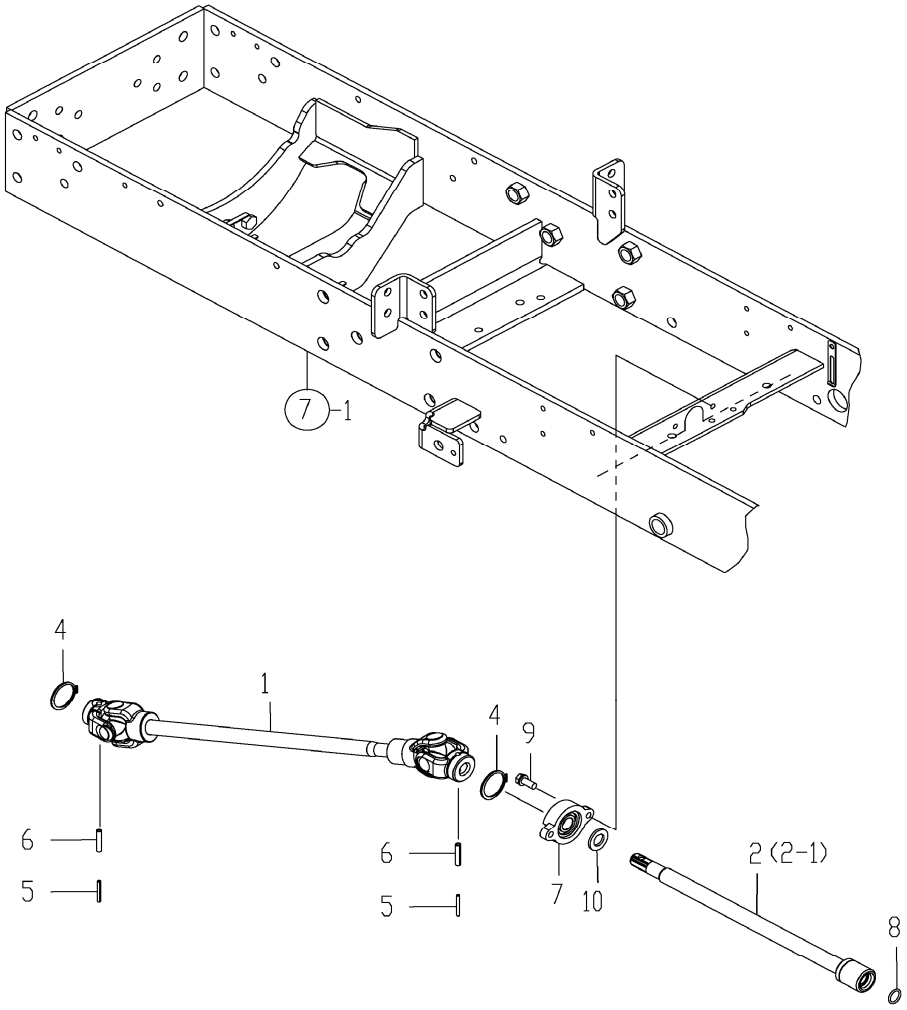

REF NO.	PART NUMBER	DESCRIPTION	QTY
1	CY-1A7880-13310	SHAFT CMP,POP. F	1
2	CY-1A7880-13410	SHAFT CMP,PROP. R	1
2-1	CY-1A7880-13411	SHAFT CMP,PROP. R	1
3	CY-1A7880-13450	RETAINER 40,BEARING	1
4	CY-22242-000360	RING, 36	2
5	CY-22351-035032	PIN, 3.5A X 32	2
6	CY-22351-060032	PIN, 6.0A X 32	2
7	CY-1A7500-13360	BEARING, 6203UU	1
8	CY-24311-000160	PACKING, P 16.0	1
9	CY-26013-080202	BOLT, 8 X 16	2
10	CY-22137-160000	WASHER, 16	1

Copyright 2007 Cub Cadet Yanmar LLC

FIG. 14. FRONT DRIVE SHAFT

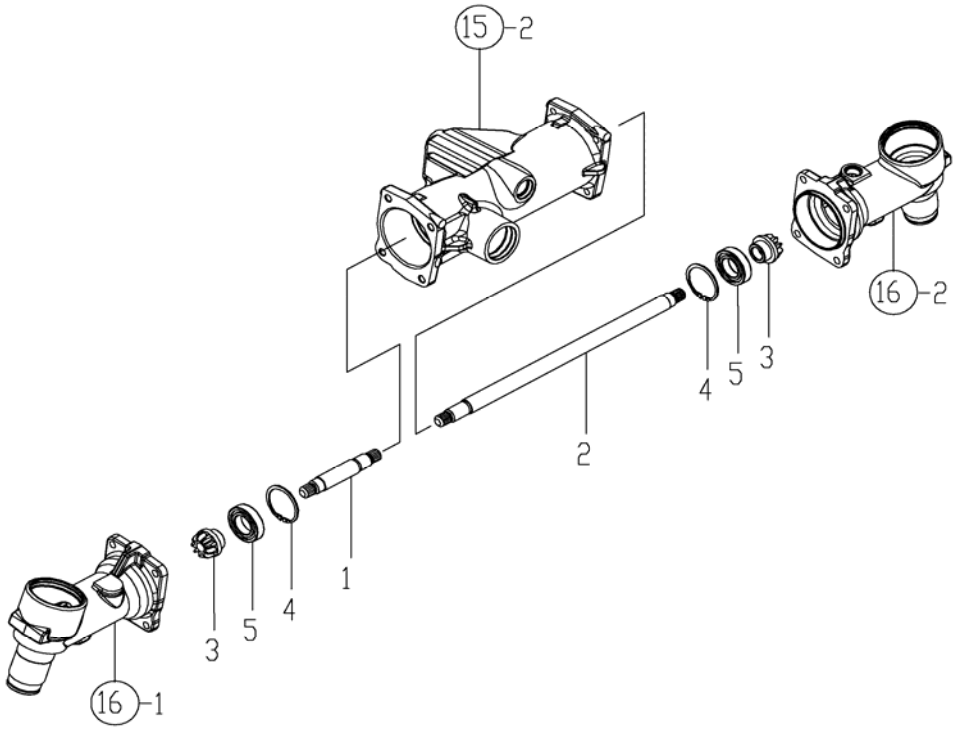

REF NO.	PART NUMBER	DESCRIPTION	QTY
1	CY-1A7880-13510	SHAFT L,FRONT 1	1
2	CY-1A7880-13520	SHAFT R,FRONT 1	1
3	CY-1A7880-13530	GEAR 9T,BEVEL	2
4	CY-22252-000550	RING, 55	2
5	CY-24101-060064	BEARING, 6006 NTN	2

Copyright 2007 Cub Cadet Yanmar LLC

THIS PAGE INTENTIONALLY LEFT BLANK

Copyright 2007 Cub Cadet Yanmar LLC

FIG. 15. FRONT AXLE CASE

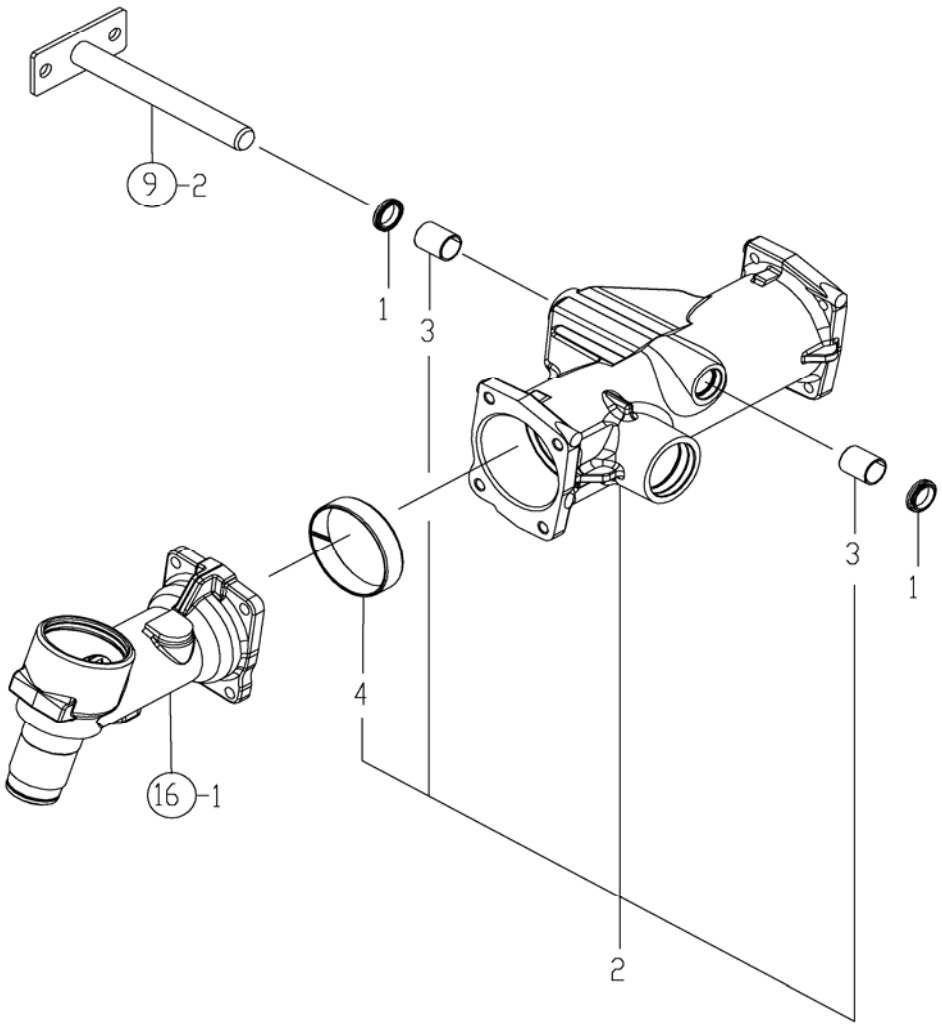

REF NO.	PART NUMBER	DESCRIPTION	QTY
1	CY-1A7880-11560	DUST SEAL 22X30X6	2
2	CY-1A7880-13600	HOUSING,FURONT AXLE	1
3	CY-1A7880-11540	BUSHING 22X25X30	2
4	CY-1A7130-13270	BUSH 85X90X20	1

Copyright 2007 Cub Cadet Yanmar LLC

FIG. 16. FRONT GEAR CASE

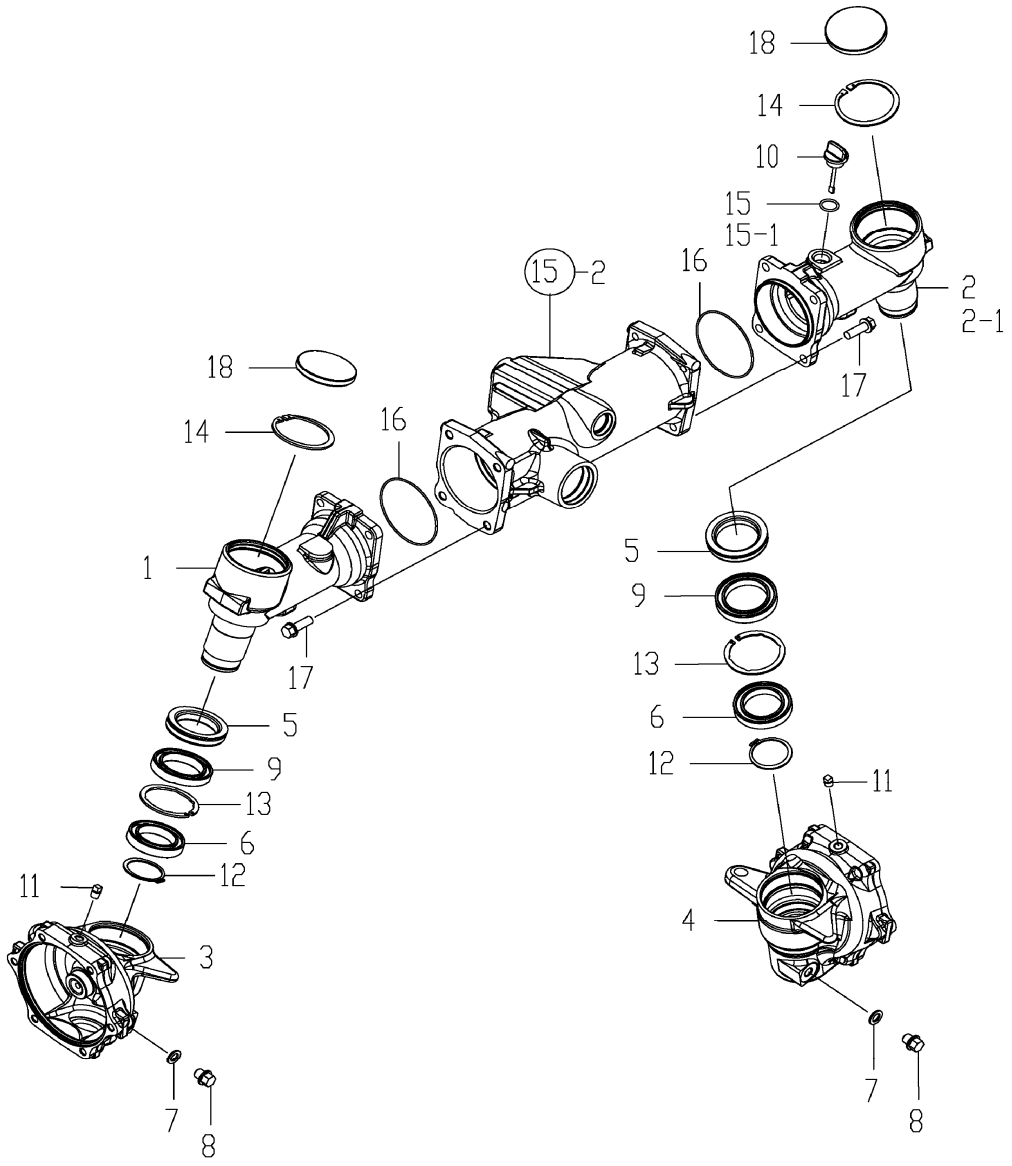

Copyright 2007 Cub Cadet Yanmar LLC

FIG. 16. FRONT GEAR CASE

REF NO.	PART NUMBER	DESCRIPTION	QTY
1	CY-1A7880-13710	CASE L,FRONT GEAR	1
2	CY-1A7880-13720	CASE R,FRONT GEAR xxxxxx & before	1
2-1	CY-1A7880-13721	CASE R,FRONT GEAR xxxxxx & after	1
3	CY-1A7880-13730	BOX L,FRONT GEAR	1
4	CY-1A7880-13740	BOX R,FRONT GEAR	1
5	CY-1A7880-13780	SEAL QLN 50721013	2
6	CY-194951-14440	BEARING, 6909	2
7	CY-198165-24440	GASKET, 20X12X2	2
8	CY-198165-24490	BOLT, M12X12	2
9	CY-194105-26430	BEARING, 6910	2
10	CY-1C6050-31250	GAUGE,OIL LEVEL	1
11	CY-194151-36670	PLUG, PF02	2
12	CY-22242-000450	RING, 45	2
13	CY-22252-000681	RING, 68	2
14	CY-22252-000720	RING, 72	2
15	CY-1A7880-13770	O-RING 18 xxxxxx & before	1
15-1	CY-24311-000180	PACKING, P 18.0 xxxxxx & after	1
16	CY-24341-000900	PACKING, S 90.0	2
17	CY-26106-100302	BOLT, 10 X 30	8
18	CY-27260-720000	CAP, SEALING 72	2

Copyright 2007 Cub Cadet Yanmar LLC

FIG. 17. FRONT SHAFT

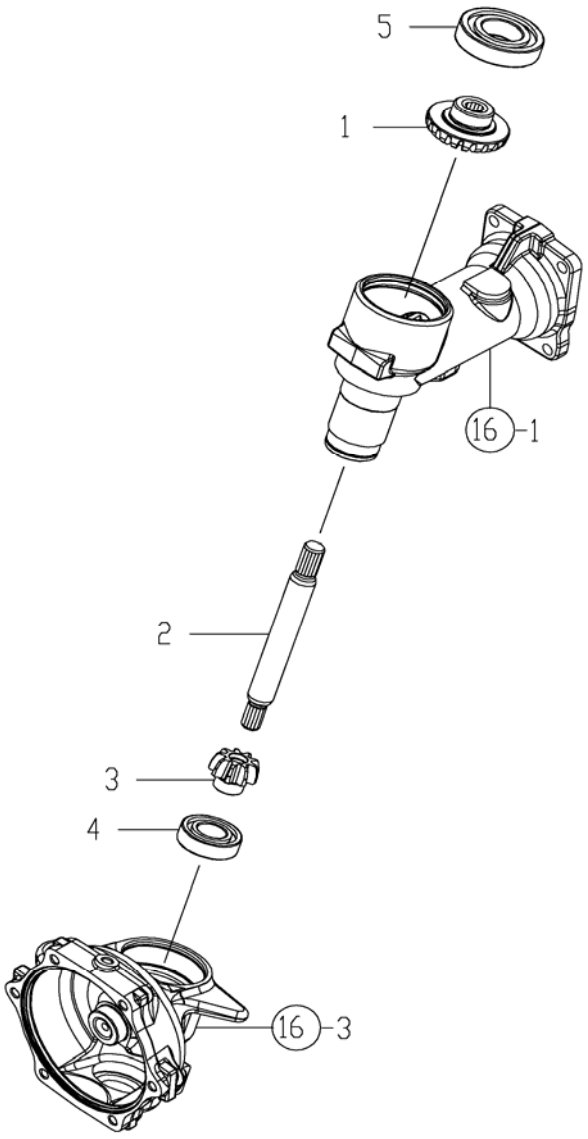

REF NO.	PART NUMBER	DESCRIPTION	QTY
1	CY-1A7880-13540	GEAR, 20T,BEVEL	2
2	CY-1A7880-13810	SHAFT,FRONT 2	2
3	CY-1A7880-13820	PINION F,FINAL	2
4	CY-24101-062054	BEARING, 6205 NTN	2
5	CY-24101-062074	BEARING, 6207	2

Copyright 2007 Cub Cadet Yanmar LLC

FIG. 18. FRONT SPINDLE

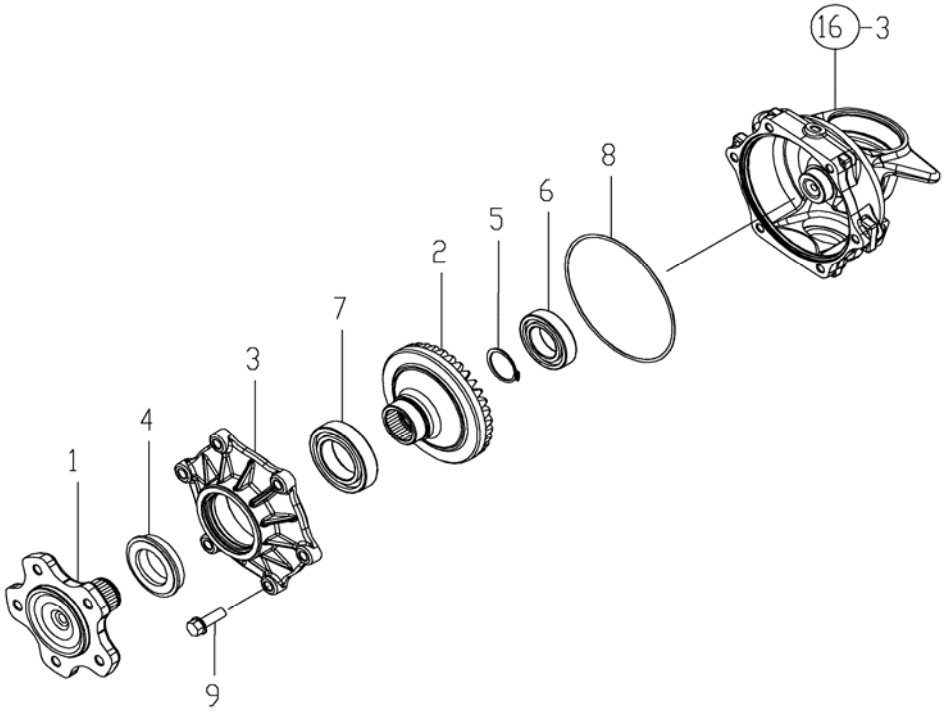

REF NO.	PART NUMBER	DESCRIPTION	QTY
1	CY-1A7880-14110	SPINDLE,FRONT	2
2	CY-1A7880-14120	GEAR F,FINAL	2
3	CY-1A7880-14130	CASE,FRONT BEARING	2
4	CY-1E8420-55430	SEAL, QLFY40X62X14	2
5	CY-22242-000340	RING, 34	2
6	CY-24101-060074	BEARING, 6007 NTN	2
7	CY-24101-060094	BEARING, 6009 NTN	2
8	CY-24321-001300	PACKING,G130.0	2
9	CY-26106-100302	BOLT, 10 X 30	12

Copyright 2007 Cub Cadet Yanmar LLC

FIG. 19. PROPELLAR SHAFT COVER

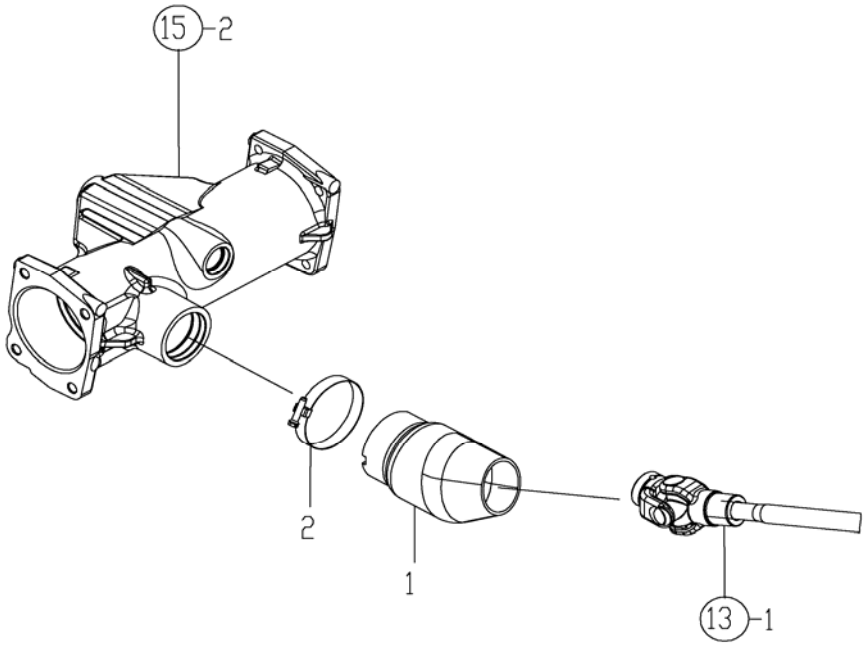

REF NO.	PART NUMBER	DESCRIPTION	QTY
1	CY-1A7880-14620	COVER,SHAFT	1
2	CY-23000-075000	CLAMP, HOSE 75	1

Copyright 2007 Cub Cadet Yanmar LLC

FIG. 20. FRONT WHEEL TIRE (BAR)

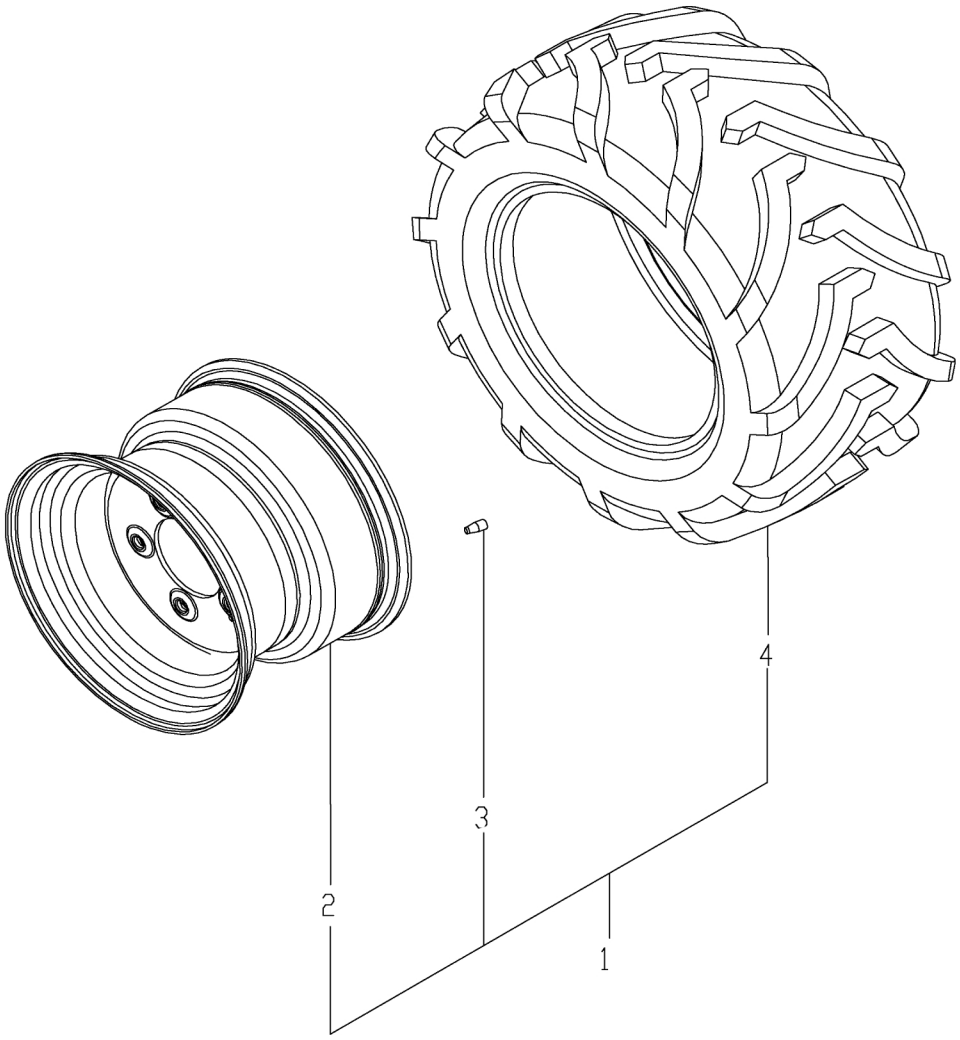

REF NO.	PART NUMBER	DESCRIPTION	QTY
1	N/A	R1 FRONT TIRE KIT	2
2	CY-1A7880-14830	WHEEL 10X7.0	2
3	CY-1A7880-14840	VALVE	2
4	CY-1A7880-14920	TIRE,18X8.5-10 R3	2

Copyright 2007 Cub Cadet Yanmar LLC

FIG. 21. FRONT WHEEL TIRE (TURF)

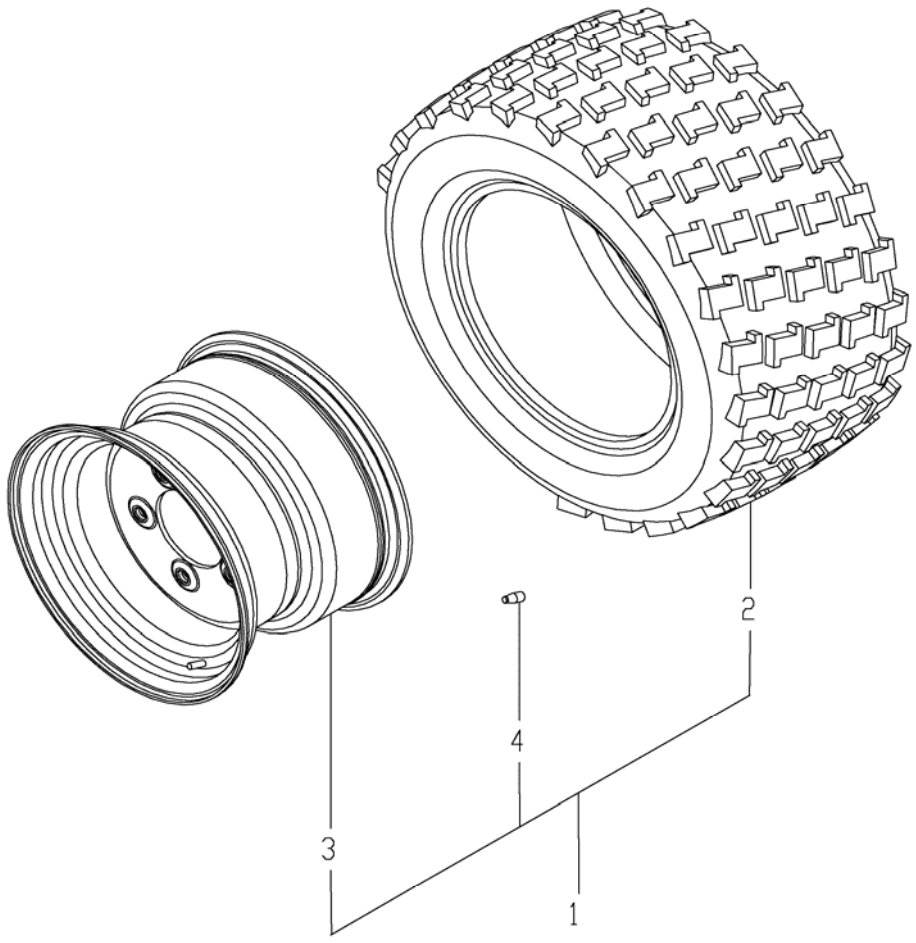

REF NO.	PART NUMBER	DESCRIPTION	QTY
1	N/A	R3 FRONT TIRE KIT	2
2	CY-1A7880-14710	TIRE,18X8.5-10 R3	2
3	CY-1A7880-14830	WHEEL 10X7.0	2
4	CY-1A7880-14840	VALVE	2

Copyright 2007 Cub Cadet Yanmar LLC

FIG. 22. FRONT WHEEL TIRE

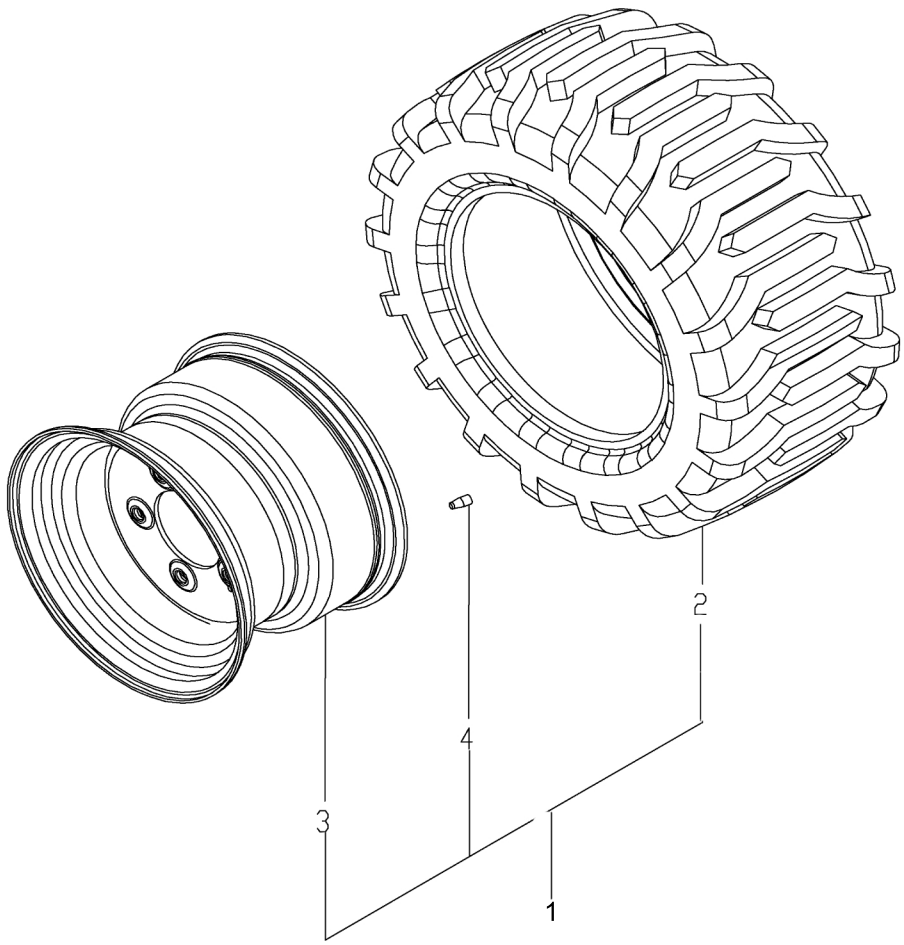

REF NO.	PART NUMBER	DESCRIPTION	QTY
1	N/A	R4 FRONT TIRE KIT	2
2	CY-1A7880-14820	TIRE,18X8.5-10 R4	2
3	CY-1A7880-14830	WHEEL 10X7.0	2
4	CY-1A7880-14840	VALVE	2

Copyright 2007 Cub Cadet Yanmar LLC

FIG. 23. FRONT HUB BOLT

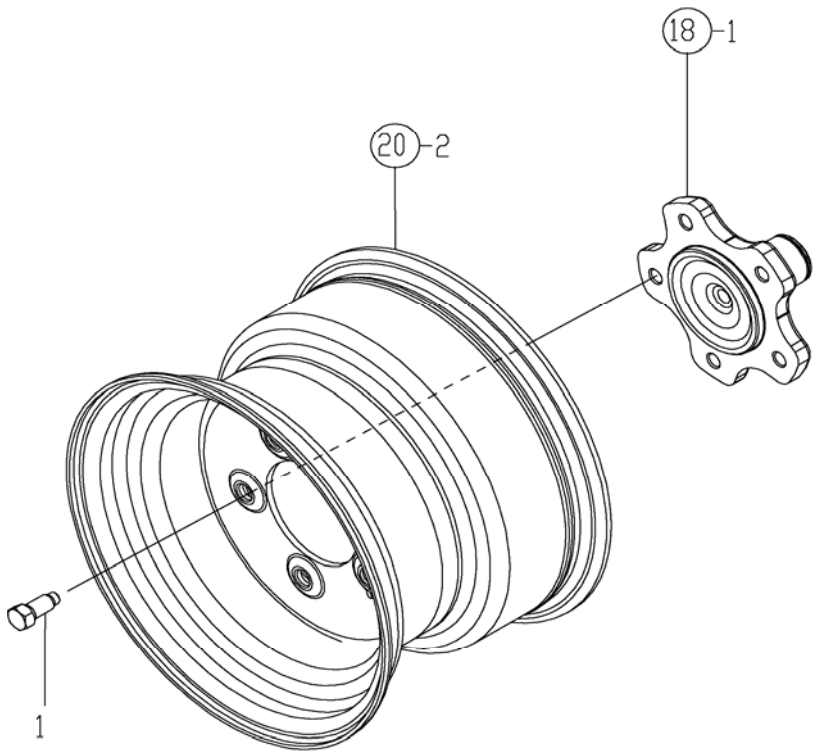

REF NO.	PART NUMBER	DESCRIPTION	QTY
1	CY-1A7880-34180	BOLT 7/16-20UNF	10

Copyright 2007 Cub Cadet Yanmar LLC

FIG. 24. STEERING WHEEL

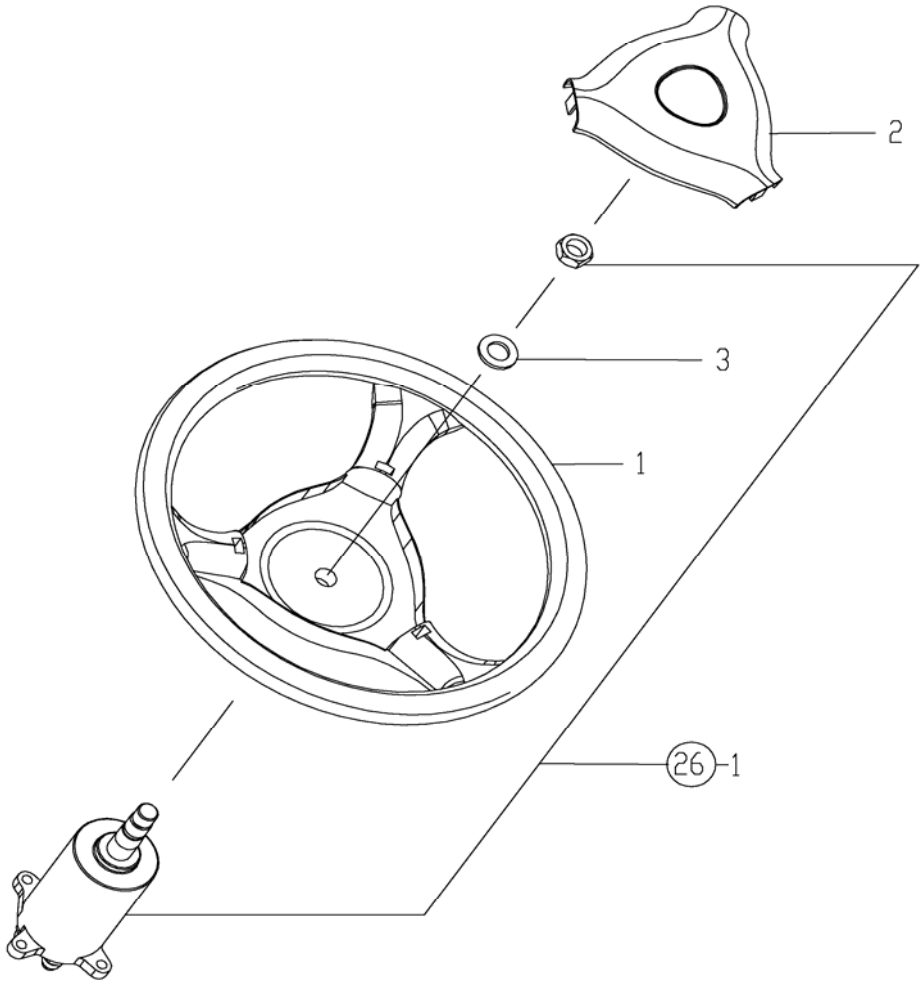

REF NO.	PART NUMBER	DESCRIPTION	QTY
1	CY-1A7880-15700	WHEEL,STEERING	1
2	CY-1A7880-15740	CAP,STEERING WHEEL	1
3	CY-22137-160000	WASHER, 16	1

Copyright 2007 Cub Cadet Yanmar LLC

FIG. 25. COLUMN BRACKET

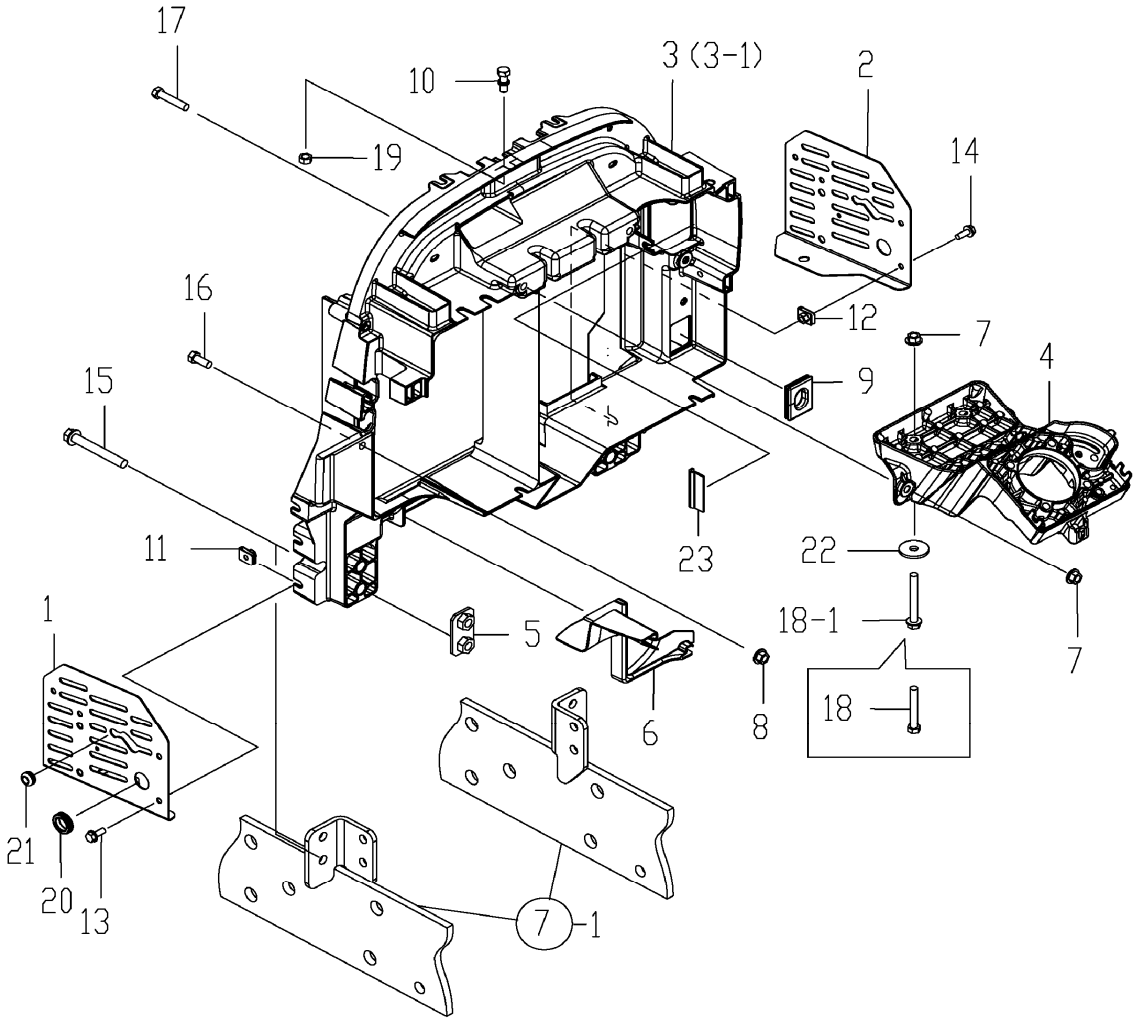

Copyright 2007 Cub Cadet Yanmar LLC

FIG. 25. COLUMN BRACKET

REF NO.	PART NUMBER	DESCRIPTION	QTY
1	CY-1A7880-05150	COVER ASSY,LH,F-BELT	1
2	CY-1A7880-05190	COVER RH,FAN BELT	1
3	CY-1A7880-15110	BRACKET,COLUMN	1
3-1	CY-1A7880-15100	BRACKET, COLUMN	1
4	CY-1A7880-15120	BRACKET,STEERING	1
5	CY-1A7880-15130	STAY,COLUMN	2
6	CY-1A7880-15160	BOOT,DASHCOVER	1
7	CY-194990-22140	NUT, M8	4
8	CY-194990-22140	NUT, M8	2
9	CY-1A7880-51710	GROMMET,HARNESS	1
10	CY-1A7880-61810	BOLT M8	1
11	CY-198071-61890	NUT, M6	2
12	CY-198071-61890	NUT, M6	2
13	CY-26106-060162	BOLT, 6 X 16	2
14	CY-26106-060162	BOLT, 6 X 16	2
15	CY-26106-100752	BOLT, 10 X 75	4
16	CY-26116-080202	BOLT, 8 X 20	2
17	CY-26116-080402	BOLT, 8 X 40	2
18	CY-26116-080552	BOLT, 8 X 55	2
18-1	CY-26106-080652	BOLT, 8 X 65 PLATED use w/ref # 22	2
19	CY-26716-080002	NUT, 8	1
20	CY-29311-162000	GROMMET, 16.0 X 2	1
21	CY-198071-58810	GROMMET, 8	1
22	CY-1C6140-47210	WASHER, 9 X 32 X 3.2 xxxxx & after	2
23	CY-198093-84810	SEAL , FENDER xxxxx & after	1

Copyright 2007 Cub Cadet Yanmar LLC

FIG. 26. POWER STEERING VALVE

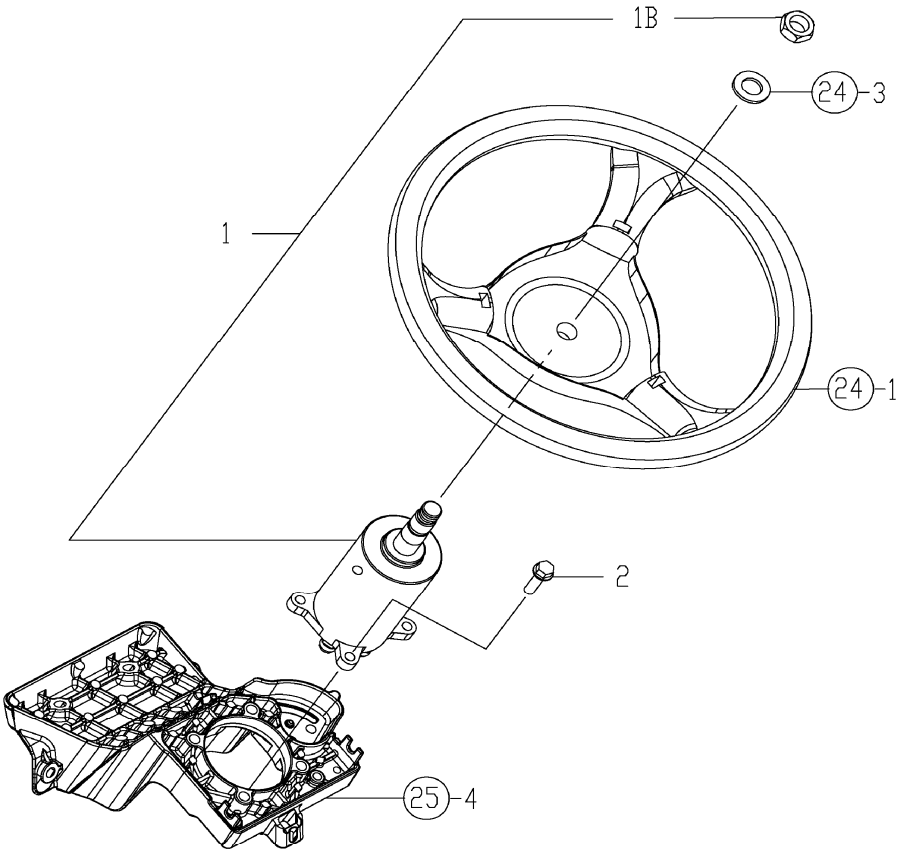

REF NO.	PART NUMBER	DESCRIPTION	QTY
1	CY-1A7880-17300	VALVE ASSY, STEERING	1
1B	CY-1S7880-17320	NUT, 5/8-18 UNF	1
2	CY-26106-080302	BOLT, 8 X 30	4

Copyright 2007 Cub Cadet Yanmar LLC

FIG. 27. POWER STEERING CYLINDER

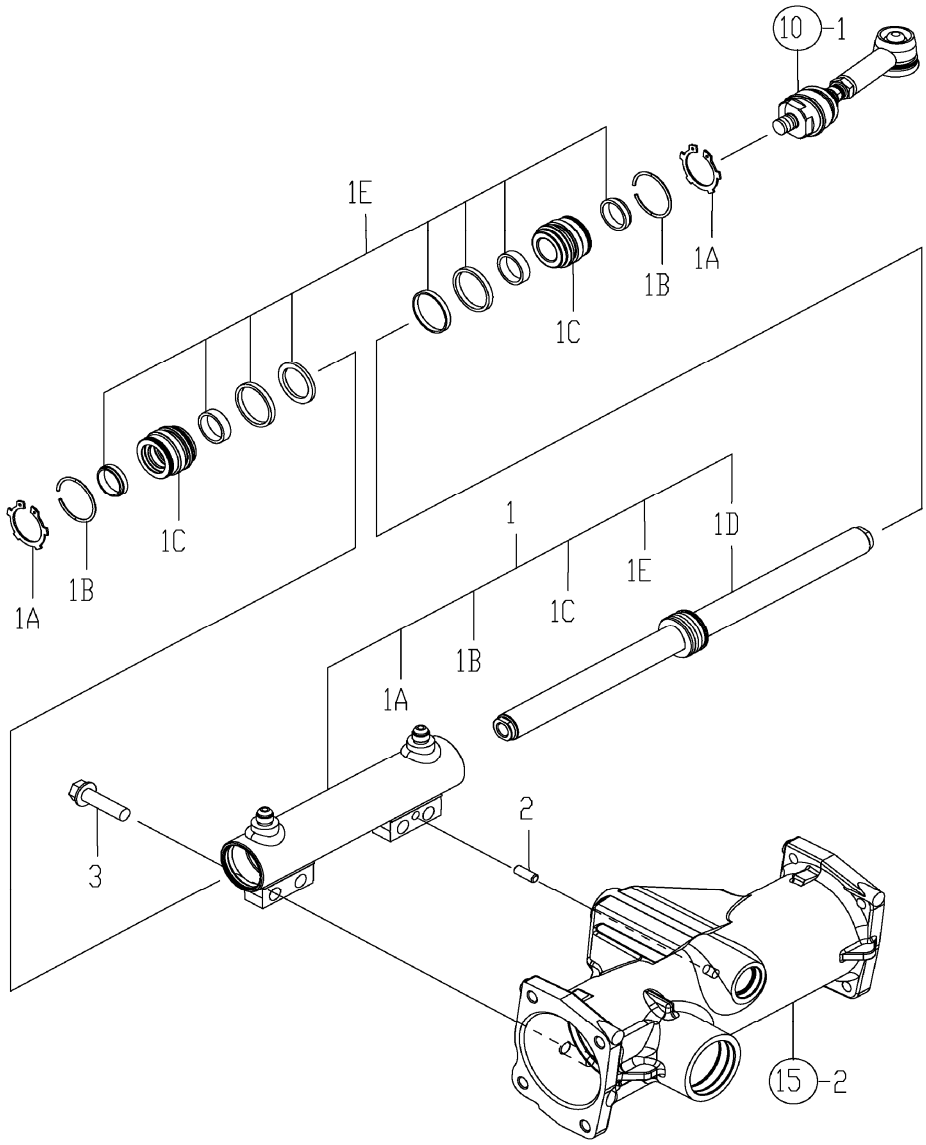

REF NO.	PART NUMBER	DESCRIPTION	QTY
1	CY-1A7880-17010	CYLINDER ASSY, PST	1
1A	CY-1A7880-17050	SEEGER RING	2
1B	CY-1A7880-17060	RETAINING RING	2
1C	CY-1A7880-17070	HEAD	2
1D	CY-1A7880-17080	ASSEMBLED ROD	1
1E	CY-1A7880-17100	SEAL KIT	1
2	CY-22312-080200	PIN, 8 X 20	1
3	CY-26106-120452	BOLT, 12 X 45	4

Copyright 2007 Cub Cadet Yanmar LLC

FIG. 28. POWER STEERING LINES

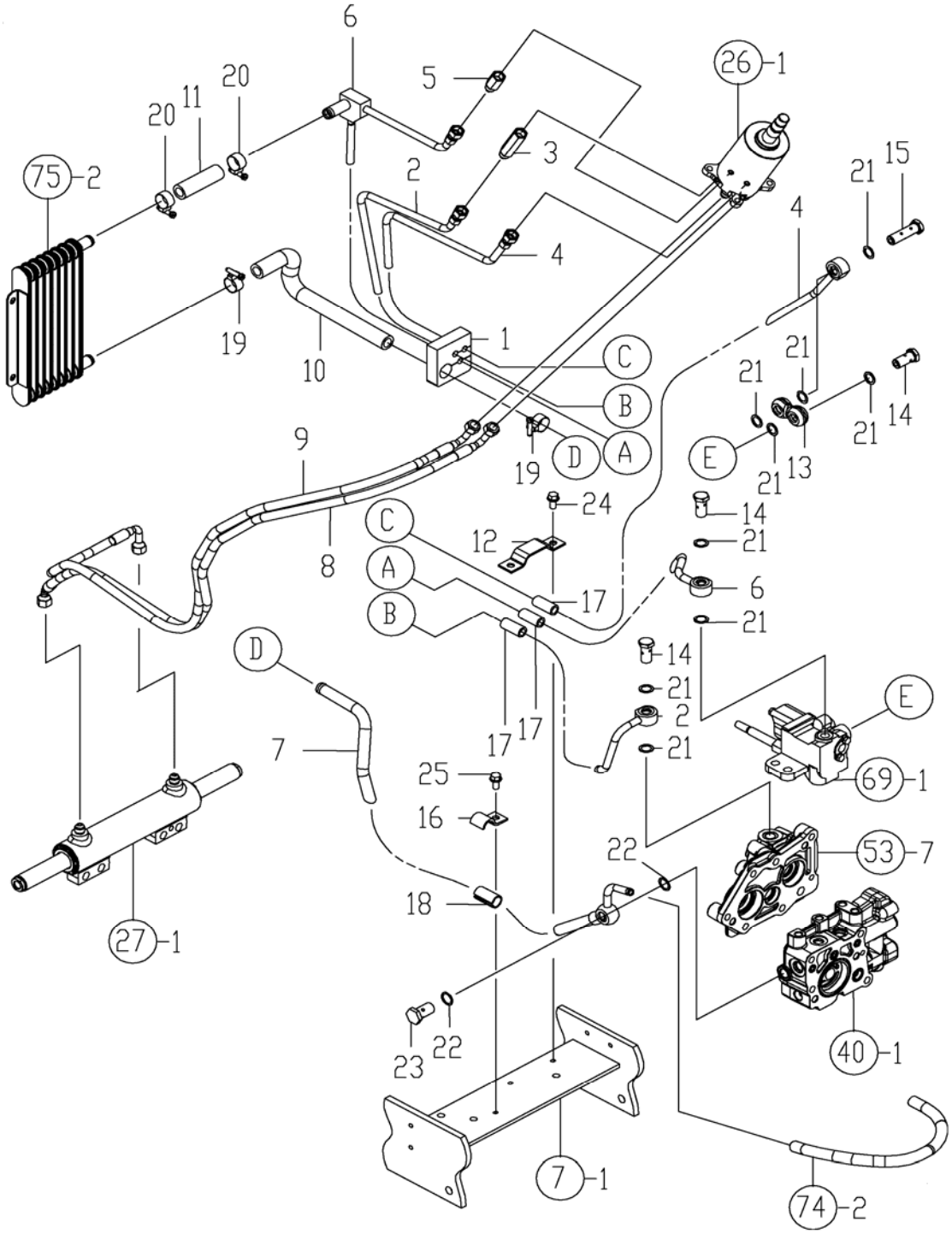

Copyright 2007 Cub Cadet Yanmar LLC

FIG. 28. POWER STEERING LINES

REF NO.	PART NUMBER	DESCRIPTION	QTY
1	CY-1A7880-15060	SEAL,PIPE	1
2	CY-1A7880-17600	HP PIPE,PUMP CMP	1
3	CY-1A7880-17630	JOINT 9/16UNF-70	1
4	CY-1A7880-17650	HP PIPE,VALVE CMP	1
5	CY-1A7880-17680	JOINT 9/16UNF-40	1
6	CY-1A7880-17700	LP PIPE,COOLER CMP	1
7	CY-1A7880-17750	LP PIPE,TANK CMP	1
8	CY-1A7880-17810	HP HOSE L, PST	1
9	CY-1A7880-17830	HP HOSE R(PST	1
10	CY-1A7880-17930	LP HOSE A(OIL COOLER	1
11	CY-1A7880-17940	LP HOSE B(OIL COOLER	1
12	CY-1A7880-17980	CLAMP, PIPE	1
13	CY-1A7880-45150	CONNECTOR9/16UNF	1
14	CY-1A7880-47510	BALL JOINT BOLT 9/16	3
15	CY-1A7880-47530	BALL JOINT BT L 9/16	1
16	CY-198240-48830	CLAMP	1
17	CY-194464-48850	TUBE	3
18	CY-198240-48850	CUSHION	1
19	CY-23000-022000	CLAMP, HOSE 22	2
20	CY-23000-022000	CLAMP, HOSE 22	2
21	CY-23414-140000	GASKET, 14 X 1.0	9
22	CY-23414-160021	GASKET, 16 X 1.0	2
23	CY-23857-100000	BOLT, JOINT 10	1
24	CY-26106-080162	BOLT, 8 X 16	2
25	CY-26106-080162	BOLT, 8 X 16	1

Copyright 2007 Cub Cadet Yanmar LLC

FIG. 29. DRIVE SHAFT

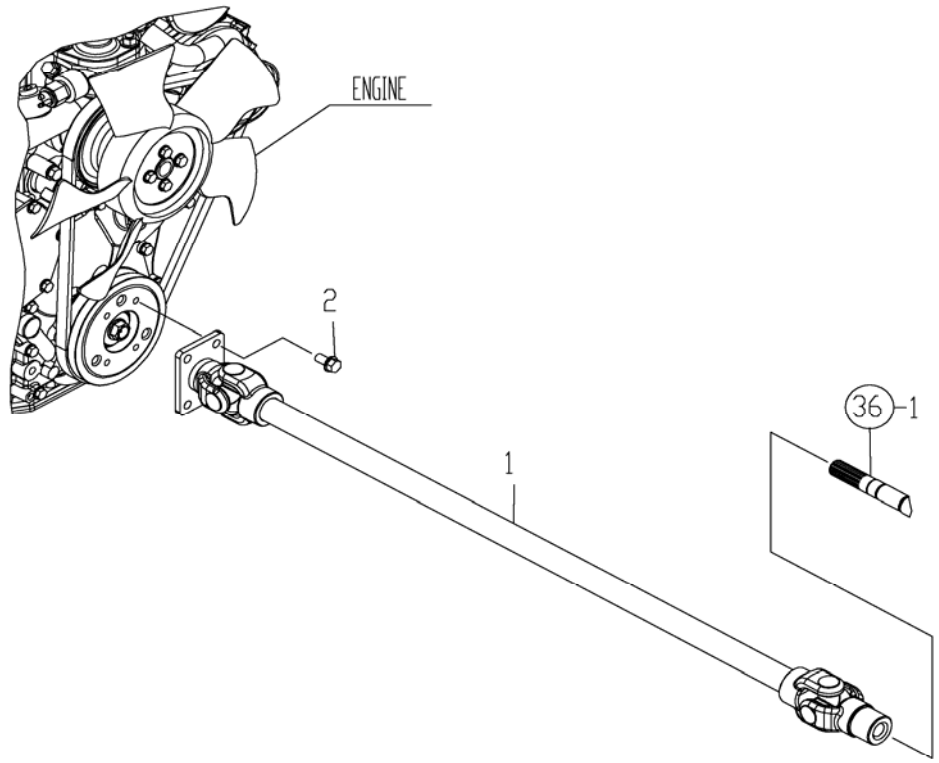

REF NO.	PART NUMBER	DESCRIPTION	QTY
1	CY-1A7880-21100	SHAFT CMP,DRIVE	1
2	CY-26106-080162	BOLT, 8 X 16	4

Copyright 2007 Cub Cadet Yanmar LLC

FIG. 30. OIL GUAGE TUBE

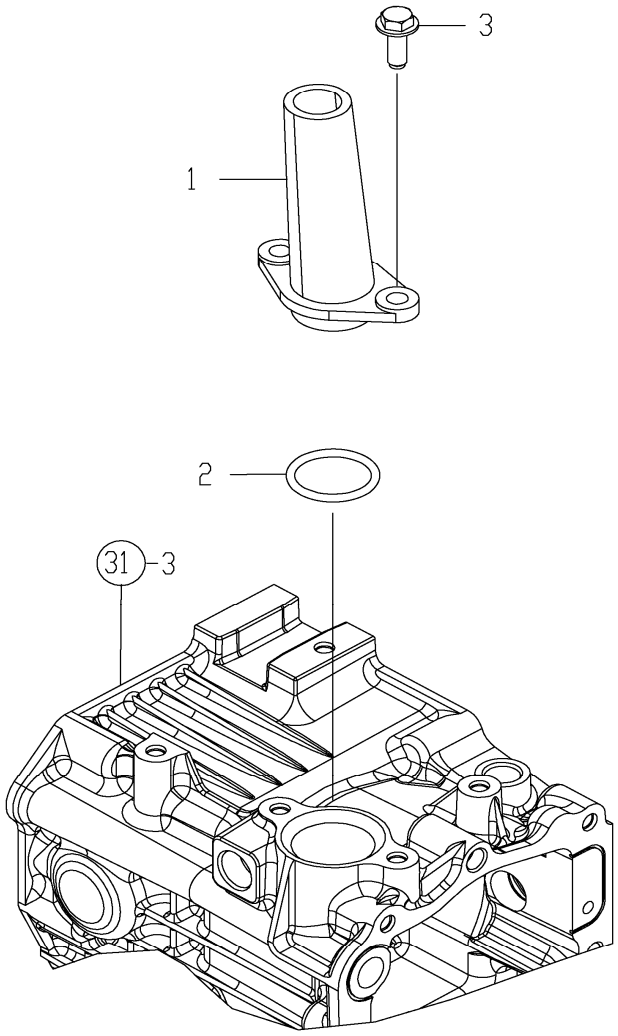

REF NO.	PART NUMBER	DESCRIPTION	QTY
1	CY-192157-24170	FILLER	1
2	CY-24311-000320	PACKING, P 32.0	1
3	CY-26476-080202	SCREW,TAPPING 8 X 20	2

Copyright 2007 Cub Cadet Yanmar LLC

FIG. 31. TRANSAXLE CASE

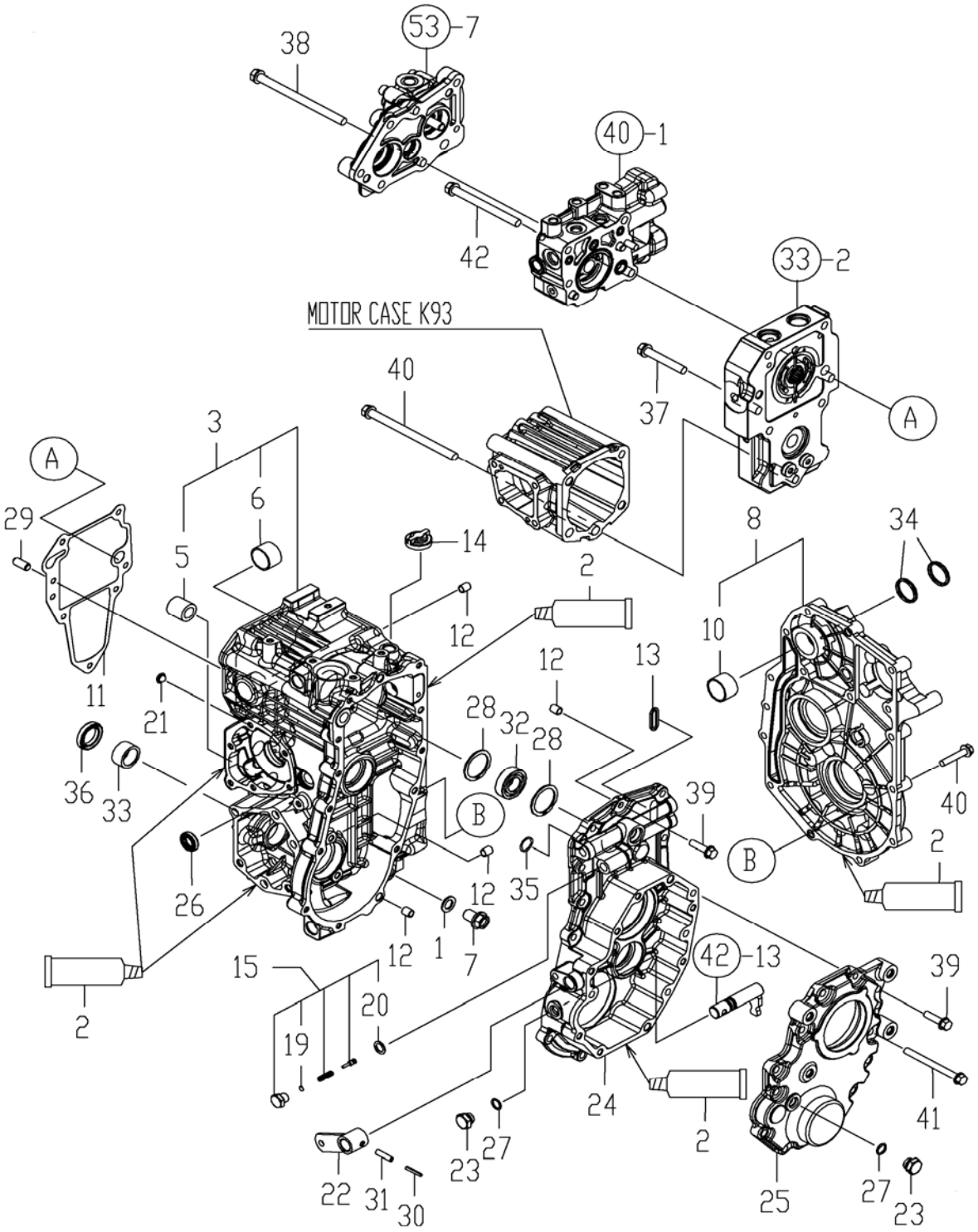

Copyright 2007 Cub Cadet Yanmar LLC

FIG. 31. TRANSAXLE CASE

REF NO.	PART NUMBER	DESCRIPTION	QTY
1	CY-1C6900-23150	WASHER	1
2	CY-977770-1207F	SEALANT, TUBE	1
3	CY-1A7050-24101	HOUSING KIT,MISSION	1
5	CY-198167-24950	JOINT, STRAINER	1
6	CY-24550-028200	BEARING, 28 X 20	1
7	CY-1A7050-24130	DRAIN BOLT M14X20	1
8	CY-1A7050-24150	COVER KIT, MISSION	1
10	CY-24550-028200	BEARING, 28 X 20	1
11	CY-192157-24192	PACKING, CENTER CASE	1
12	CY-192157-24200	COLLAR, 8X10X11.5	4
13	CY-192157-24220	D-RING	1
14	CY-194859-24252	VALVE, VENT 15	1
15	CY-192157-24450	RELIEF KIT, PTO	1
19	CY-192157-27090	SHIM, 7X0.2	1
20	CY-23414-120000	GASKET, 12 X 1.0	1
21	CY-192157-24801	STRAINER	2
22	CY-187K06-26710	PTO ARM CMP	1
23	CY-187K06-26740	PLUG 9/16-18UNF	2
24	CY-192157-26810	CASE, REAR PTO	1
25	CY-192157-26821	COVER, REAR PTO CASE	1
26	CY-194065-27270	SEAL, TC16266	1
27	CY-94850-49290	O-RING, 6-1	2
28	CY-22262-000420	RING, 42	2
29	CY-22312-100200	PIN, 10 X 20	1
30	CY-22351-035025	PIN, 3.5A X 25	1
31	CY-22351-060025	PIN, 6.0A X 25	1
32	CY-24101-060044	BEARING, 6004	1
33	CY-24162-253216	NEEDLE, 253216 NTN	1
34	CY-24311-000260	PACKING, P 26.0	2
35	CY-24351-190170	PACKING, 19017	1
36	CY-24421-253807	SEAL, TC253807	1
37	CY-26016-100652	BOLT, 10 X 65	1
38	CY-26016-101452	BOLT, 10 X 145	3
39	CY-26106-080302	BOLT, 8 X 30	19
40	CY-26106-080402	BOLT, 8 X 40	16
41	CY-26106-080902	BOLT, 8 X 90	4
42	CY-26106-101052	BOLT, 10 X 105	1

Copyright 2007 Cub Cadet Yanmar LLC

FIG. 32. OIL GAUGE

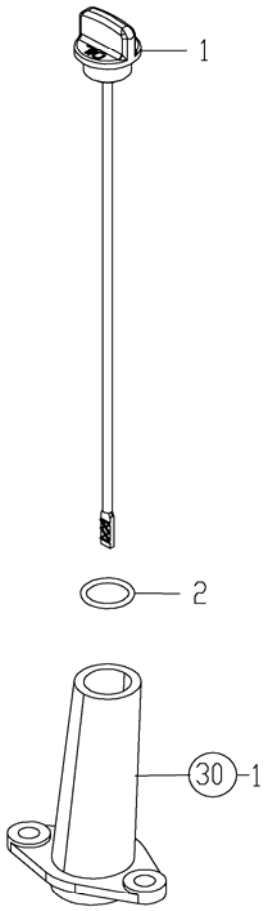

REF NO.	PART NUMBER	DESCRIPTION	QTY
1	CY-1A7880-21500	PLUG,DIPSTICK 20X271	1
2	CY-24311-000180	PACKING, P 18.0	1

Copyright 2007 Cub Cadet Yanmar LLC

FIG. 33. CENTER CASE

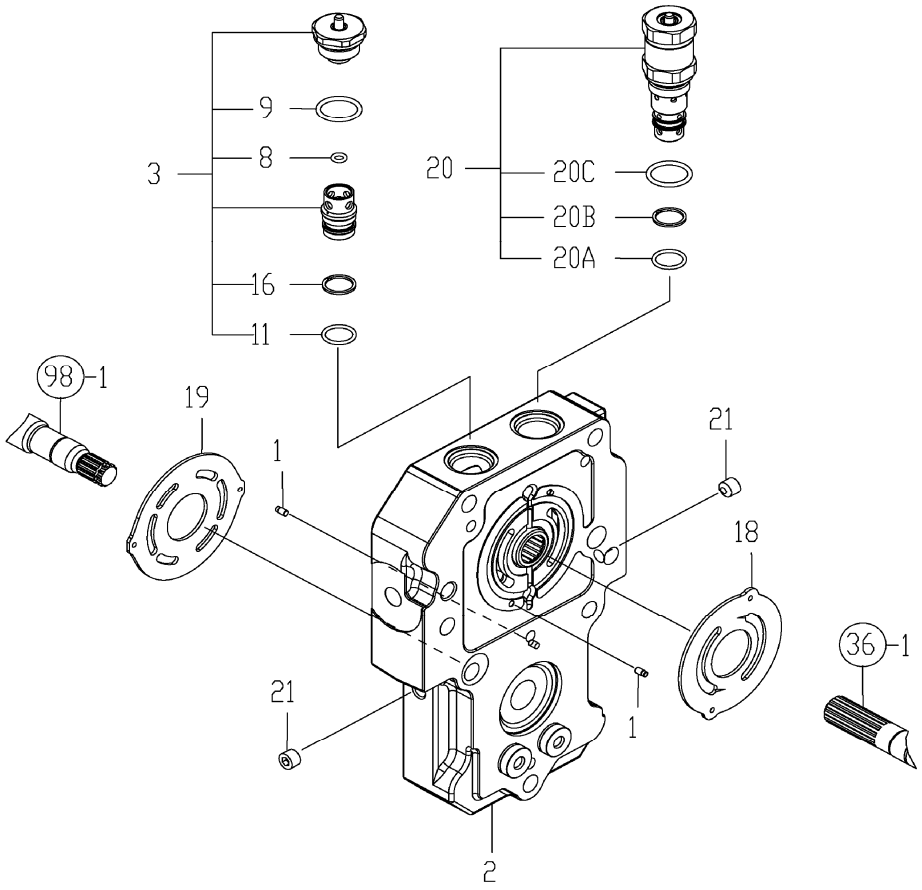

REF NO.	PART NUMBER	DESCRIPTION	QTY
1	CY-192163-24420	PIN, KNOCK 3.5	4
2	CY-187K06-24500	CENTER CASE K93 CMP	1
3	CY-1A7050-24990	CHECK VALVE (R CMP	1
8	CY-24311-000050	PACKING, P 5.0	1
9	CY-24311-000200	PACKING, P 20.0	1
11	CY-192154-24670	O-RING, 1015	1
16	CY-192157-40180	RING, BACK UP 18	1
18	CY-168H61-29260	VALVE PLATE(P	1
19	CY-168HK0-29351	VALVE PLATE(M	1
20	CY-187K06-40010	RELEAF ASSY,TOW 25	1
20A	CY-192154-24670	O-RING, 1015	1
20B	CY-192157-40180	RING, BACK UP 18	1
20C	CY-24311-000200	PACKING, P 20.0	1
21	CY-23871-010000	PLUG, R01	2

Copyright 2007 Cub Cadet Yanmar LLC

FIG. 34. MOTOR CASE

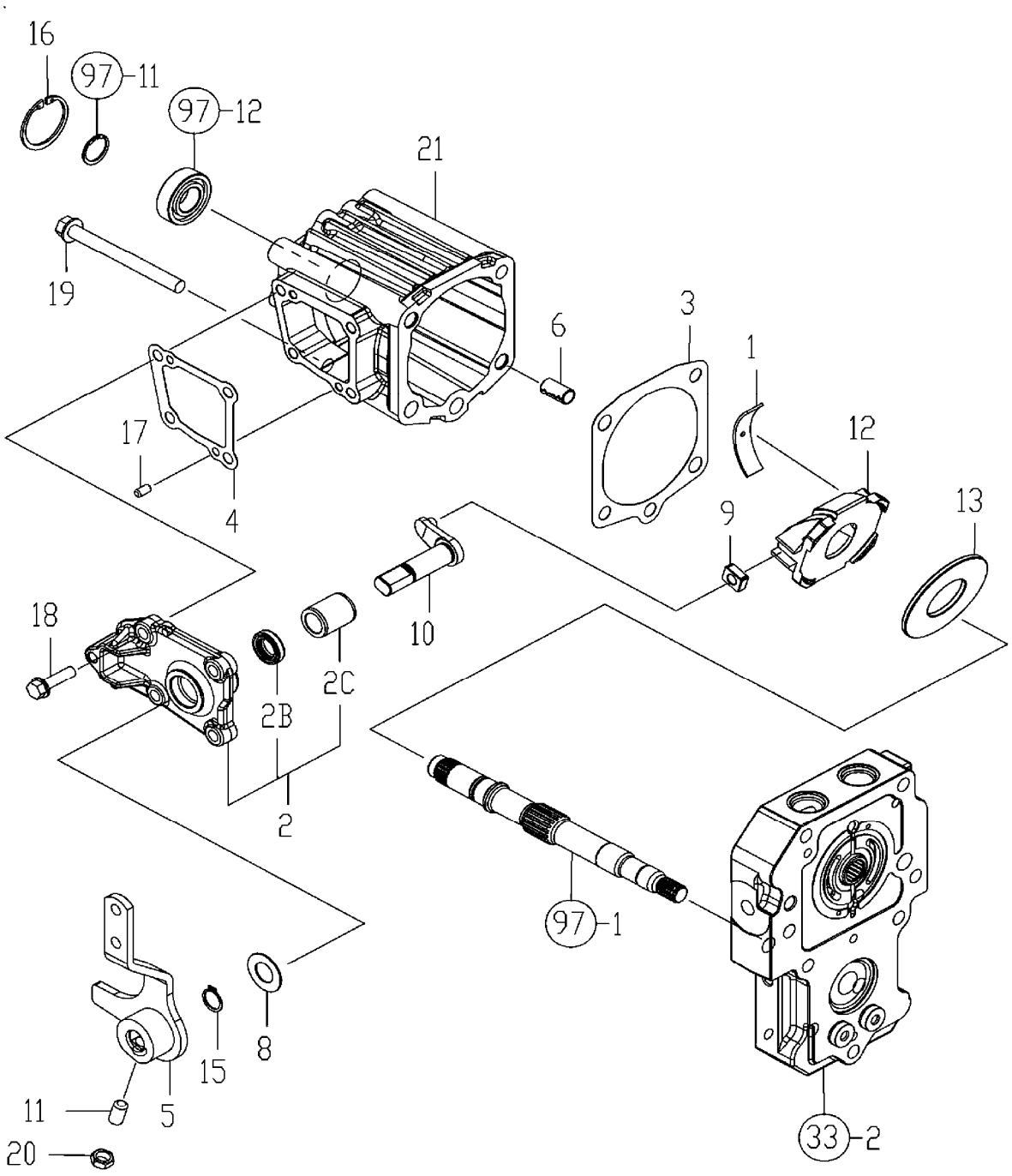

Copyright 2007 Cub Cadet Yanmar LLC

FIG. 34. MOTOR CASE

REF NO.	PART NUMBER	DESCRIPTION	QTY
1	CY-178080-06200	THRUST METAL(DDR16	2
2	CY-187K06-24540	SIDE COVER ,MOTOR	1
2B	CY-194065-27270	SEAL, TC16266	1
2C	CY-165H60-29840	BUSH 16X24X30	1
3	CY-192157-24560	PACKING, MOTOR CASE	1
4	CY-187K06-24570	PAKING (SIDE COVER	1
5	CY-187K06-24600	SECOND LEVER CMP	1
6	CY-192157-24850	PIN, KNOCK 12X22	2
8	CY-168H60-29390	WASHER 17X32X1	1
9	CY-168H60-29400	SHIFT BLOCK	1
10	CY-168H60-29411	CONTROL ARM	1
11	CY-1A7130-29420	SET SCREW 10X20	1
12	CY-187K06-29460	SWASH PLATE	1
13	CY-168HK0-29620	PLATE, THRUST	1
15	CY-22242-000160	RING, 16	1
16	CY-22252-000420	RING, 42	1
17	CY-22312-060100	PIN, 6 X 10	2
18	CY-26106-080302	BOLT, 8 X 30	4
19	CY-26106-101052	BOLT, 10 X 105	1
20	CY-26776-100002	NUT, 10	1
21	CY-187K06-24550	MOTOR CASE K93	1

Copyright 2007 Cub Cadet Yanmar LLC

FIG. 35. FILTER

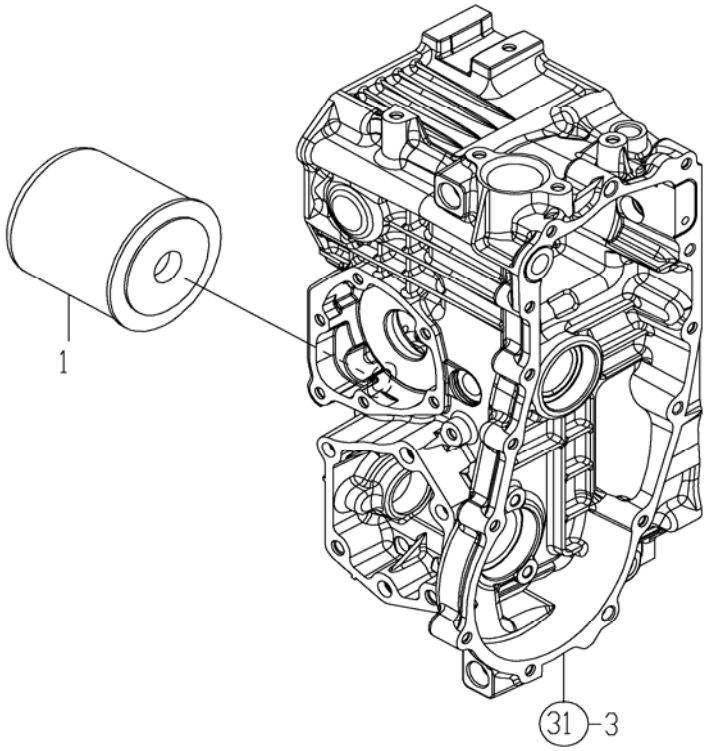

REF NO.	PART NUMBER	DESCRIPTION	QTY
1	CY-1A8160-24950	FILTER, OIL	1

Copyright 2007 Cub Cadet Yanmar LLC

FIG. 36. PUMP

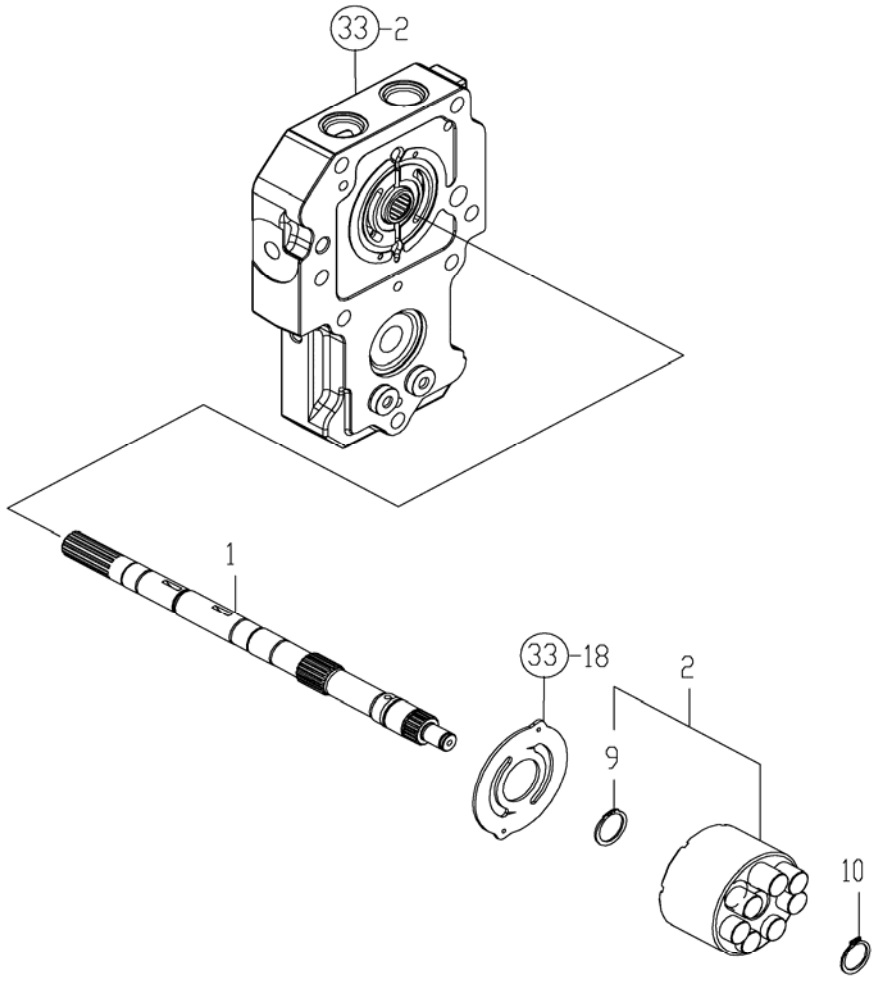

REF NO.	PART NUMBER	DESCRIPTION	QTY
1	CY-187K06-25170	PUMP SHAFT K93	1
2	CY-1A7050-25181	BLOCK ASSY, CYL. P	1
9	CY-22262-000240	RING, 24	1
10	CY-22242-000200	RING, 20	1

Copyright 2007 Cub Cadet Yanmar LLC

FIG. 37. CLUTCH SHAFT

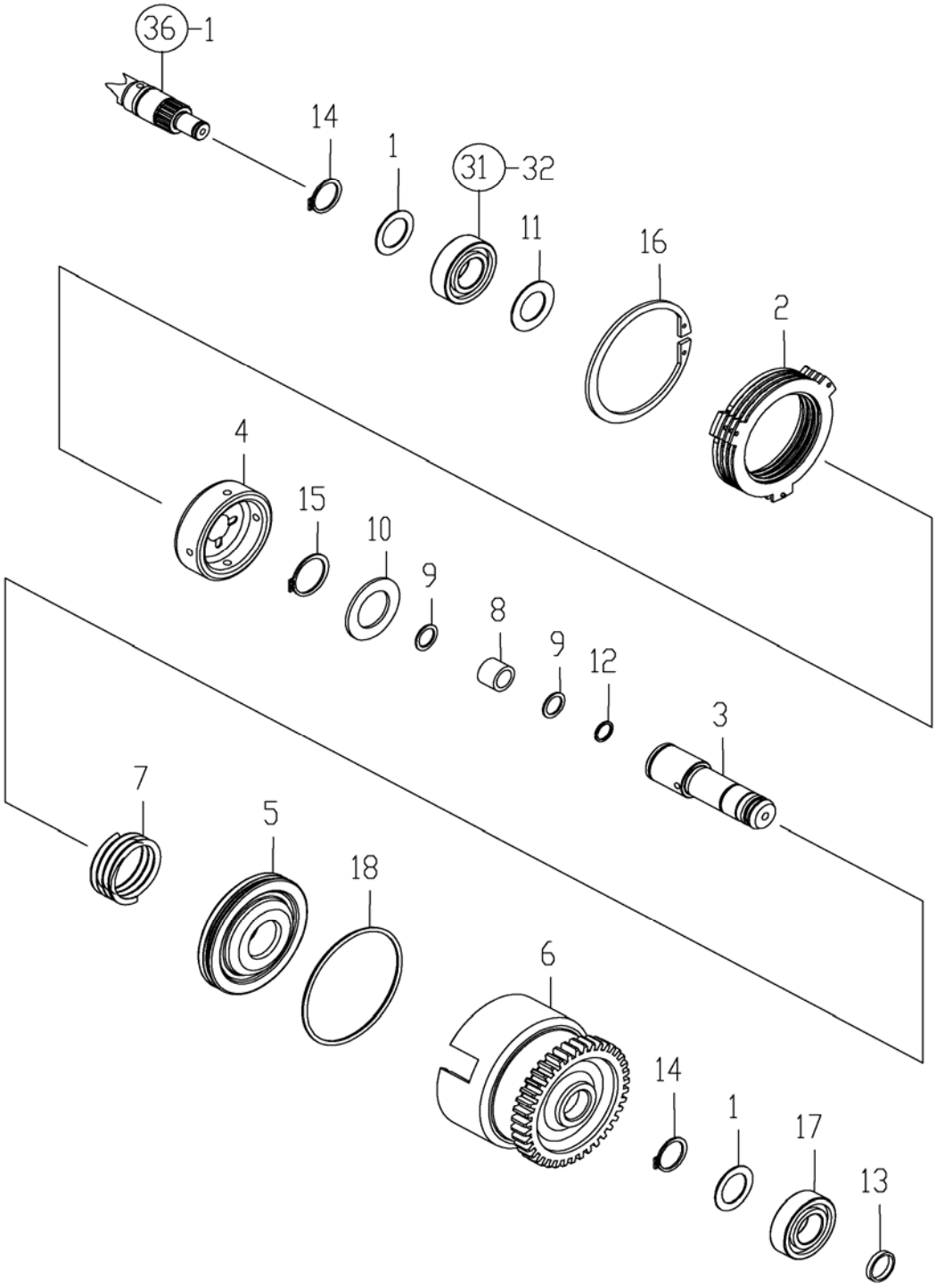

Copyright 2007 Cub Cadet Yanmar LLC

FIG. 37. CLUTCH SHAFT

REF NO.	PART NUMBER	DESCRIPTION	QTY
1	CY-194200-25270	WASHER	2
2	CY-192157-26100	DISC KIT, FRICTION	1
3	CY-192157-26111	SHAFT, CLUTCH	1
4	CY-192157-26120	COLLAR, SPLINE	1
5	CY-192157-26130	PISTON	1
6	CY-192157-26140	GEAR, CLUTCH Z=39	1
7	CY-192157-26150	SPRING, PTO RETURN	1
8	CY-192157-26160	NEEDLE, 121718	1
9	CY-192157-26170	WASHER, 13X17X1	2
10	CY-192157-26270	WASHER, 25X42X2	1
11	CY-192157-26300	WASHER, 20X34X1	1
12	CY-192157-26330	RING 12	1
13	CY-192157-26350	RING, SEAL 17203	1
14	CY-22242-000200	RING, 20	2
15	CY-22242-000250	RING, 25	1
16	CY-22252-000800	RING, 80	1
17	CY-24101-060044	BEARING, 6004	1
18	CY-24321-000750	PACKING, G 75.0	1

Copyright 2007 Cub Cadet Yanmar LLC

FIG. 38. P.T.O. BRAKE

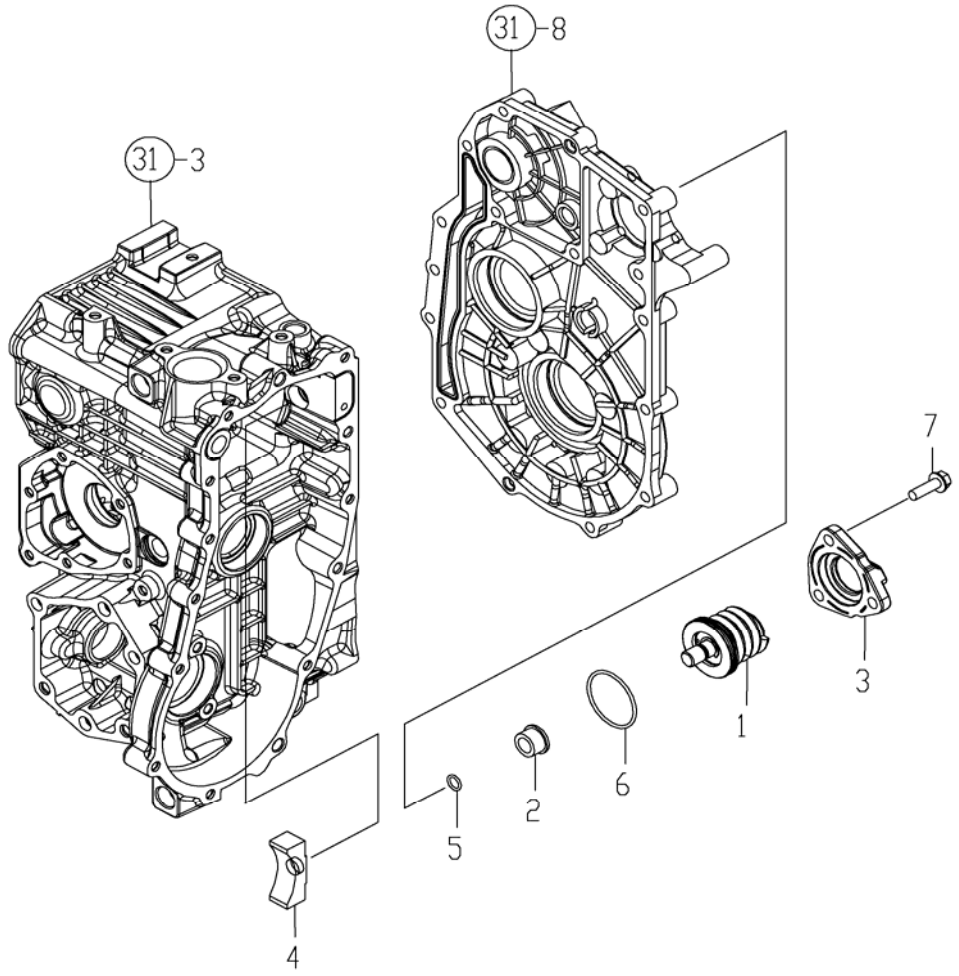

REF NO.	PART NUMBER	DESCRIPTION	QTY
1	CY-1A7050-26080	BRAKE KIT, PTO	1
2	CY-192157-26180	COLLAR, BRAKE PIN	1
3	CY-1A7050-26210	COVER, PTO BRAKE	1
4	CY-192157-26220	SHOE, PTO BRAKE	1
5	CY-24311-000100	PACKING, P 10.0	1
6	CY-24351-020450	PACKING, 2045	1
7	CY-26106-080252	BOLT, 8 X 25	3

Copyright 2007 Cub Cadet Yanmar LLC

FIG. 39. P.T.O. SHAFT

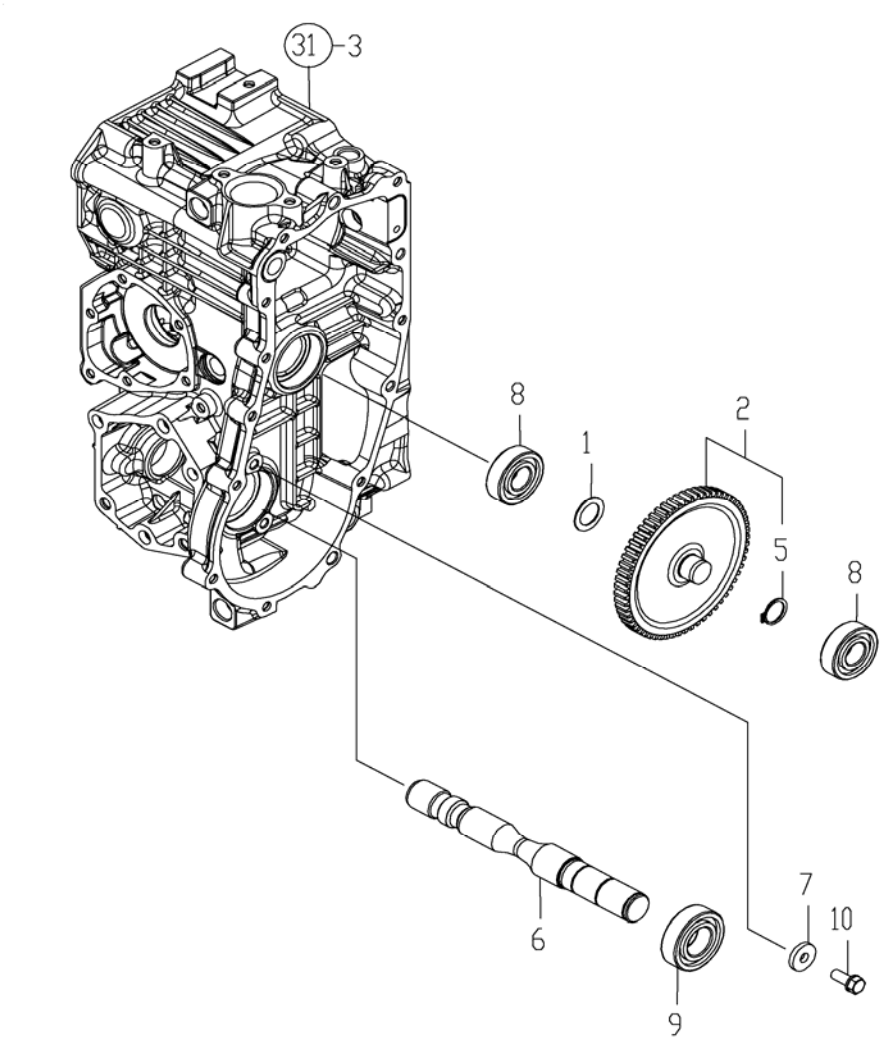

REF NO.	PART NUMBER	DESCRIPTION	QTY
1	CY-194200-25270	WASHER	1
2	CY-192157-26340	IDLE ASSY, PTO	1
5	CY-22242-000200	RING, 20	1
6	CY-1A7050-26360	SHAFT, MID PTO	1
7	CY-192157-26380	WASHER, 8.5X24X4	2
8	CY-24101-062044	BEARING, 6204	2
9	CY-24101-062054	BEARING, 6205 NTN	1
10	CY-26016-080202	BOLT, 8 X 20	2

Copyright 2007 Cub Cadet Yanmar LLC

FIG. 40. POWER PUMP

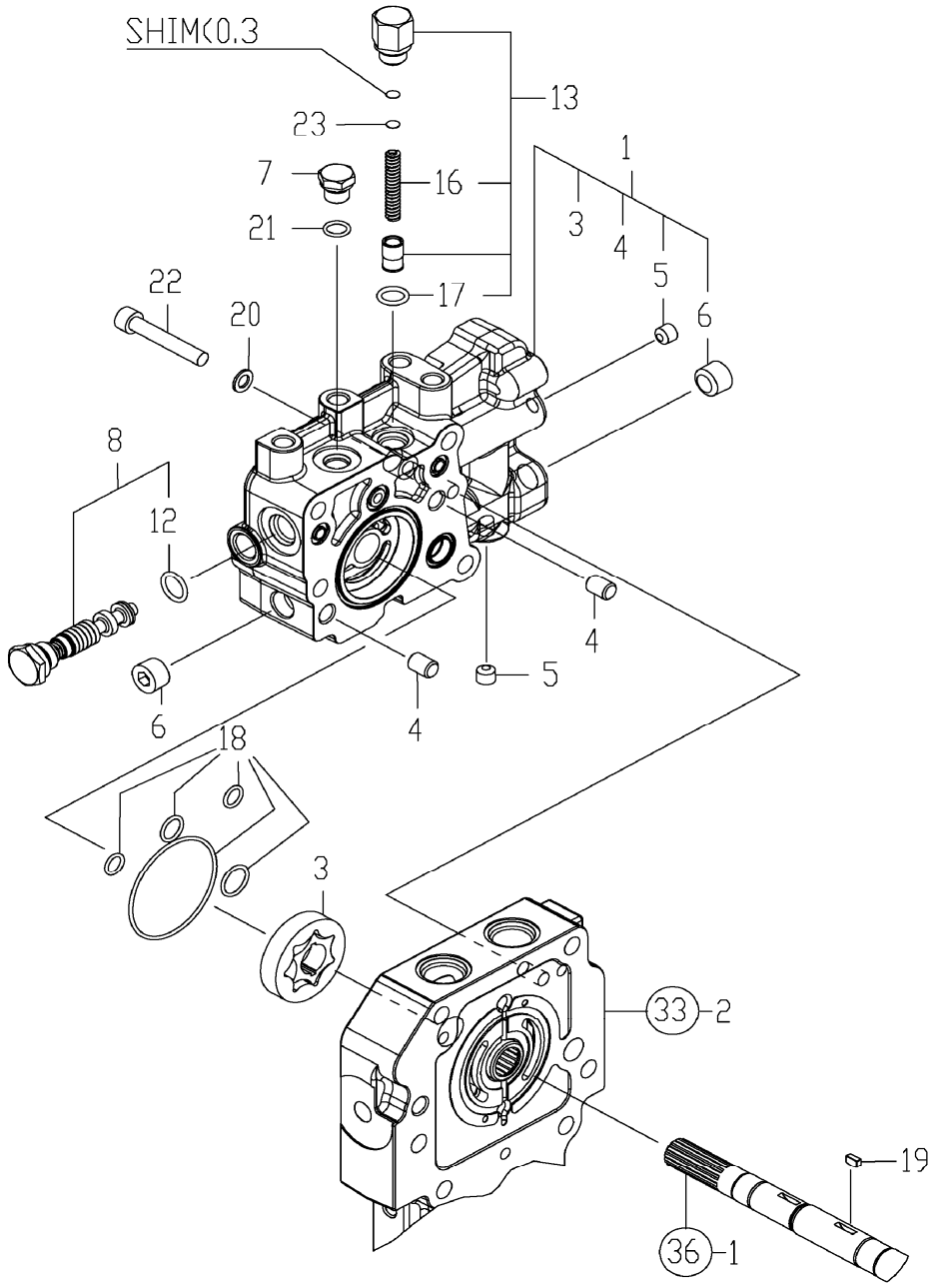

Copyright 2007 Cub Cadet Yanmar LLC

FIG. 40. POWER PUMP

REF NO.	PART NUMBER	DESCRIPTION	QTY
1	CY-187K06-26400	PUMP BODY K93 CMP	1
3	CY-1A6370-31000	ROTOR SET	1
4	CY-22312-100120	PIN, 10 X 12	2
5	CY-23871-010000	PLUG, R01	2
6	CY-23871-030000	PLUG, R03	2
7	CY-192157-26460	PLUG, 1/2-20UNF	1
8	CY-192157-26470	VALVE ASSY, REDUCING	1
12	CY-24311-000140	PACKING, P 14.0	1
13	CY-192157-26520	VALVE ASSY	1
16	CY-192157-26740	SPRING	1
17	CY-24311-000120	PACKING, P 12.0	1
18	CY-187K06-29390	PACKING KIT	1
19	CY-187K06-29890	KEY, 8X3.2	1
20	CY-22190-080002	WASHER, SEAL 8	1
21	CY-24361-090500	PACKING, AS 905	1
22	CY-26450-080502	BOLT, 8 X 50	1
23	CY-192157-27090	SHIM, T=0.2	1

Copyright 2007 Cub Cadet Yanmar LLC

THIS PAGE INTENTIONALLY LEFT BLANK

Copyright 2007 Cub Cadet Yanmar LLC

FIG. 41. SOLENIOD VALVE

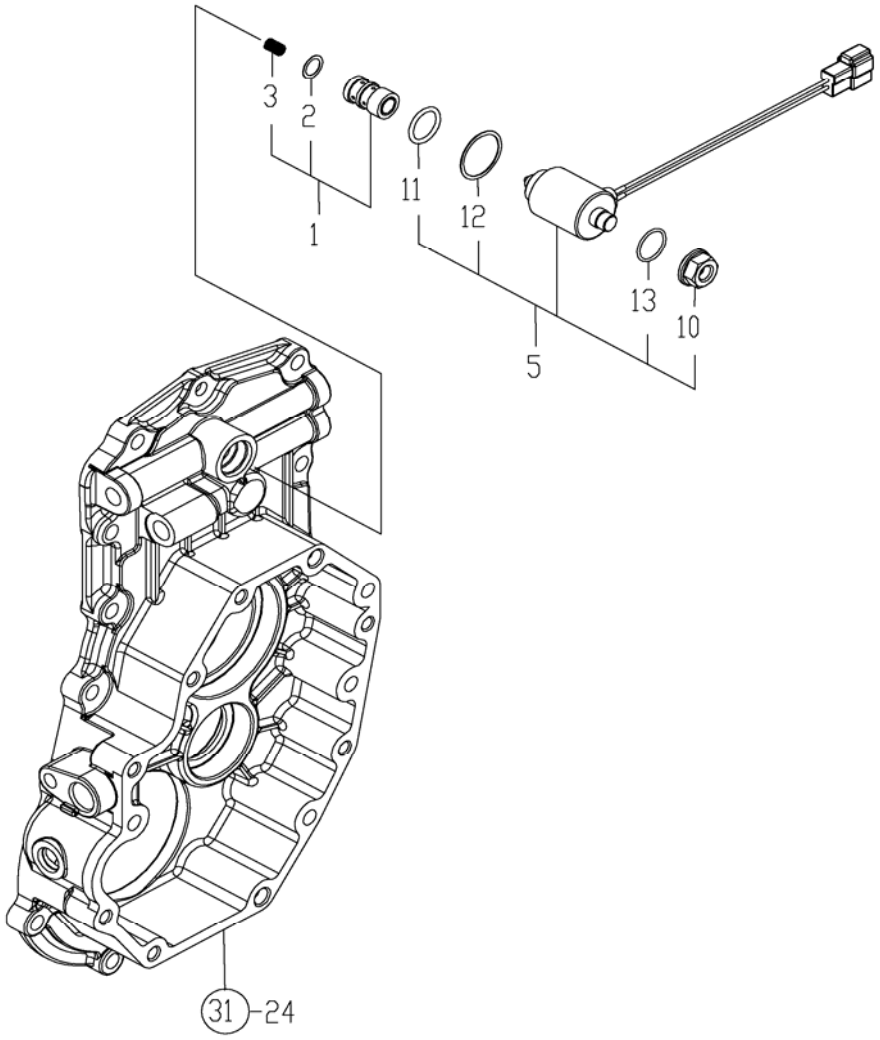

REF NO.	PART NUMBER	DESCRIPTION	QTY
1	CY-192157-26611	VALVE ASSY, SOLENOID	1
2	CY-192157-26600	SHIM, WASHER	1
3	CY-192157-26641	SPRING, SOLENOID	1
5	CY-192159-27700	SOLENOID ASSY	1
10	CY-192159-27790	NUT, PLASTIC	1
11	CY-24311-000180	PACKING, P 18.0	1
12	CY-192159-27780	GASKET, SOLENOID	1
13	CY-24341-000112	PACKING, S 11.2	1

Copyright 2007 Cub Cadet Yanmar LLC

FIG. 42. REAR P.T.O. SHAFT

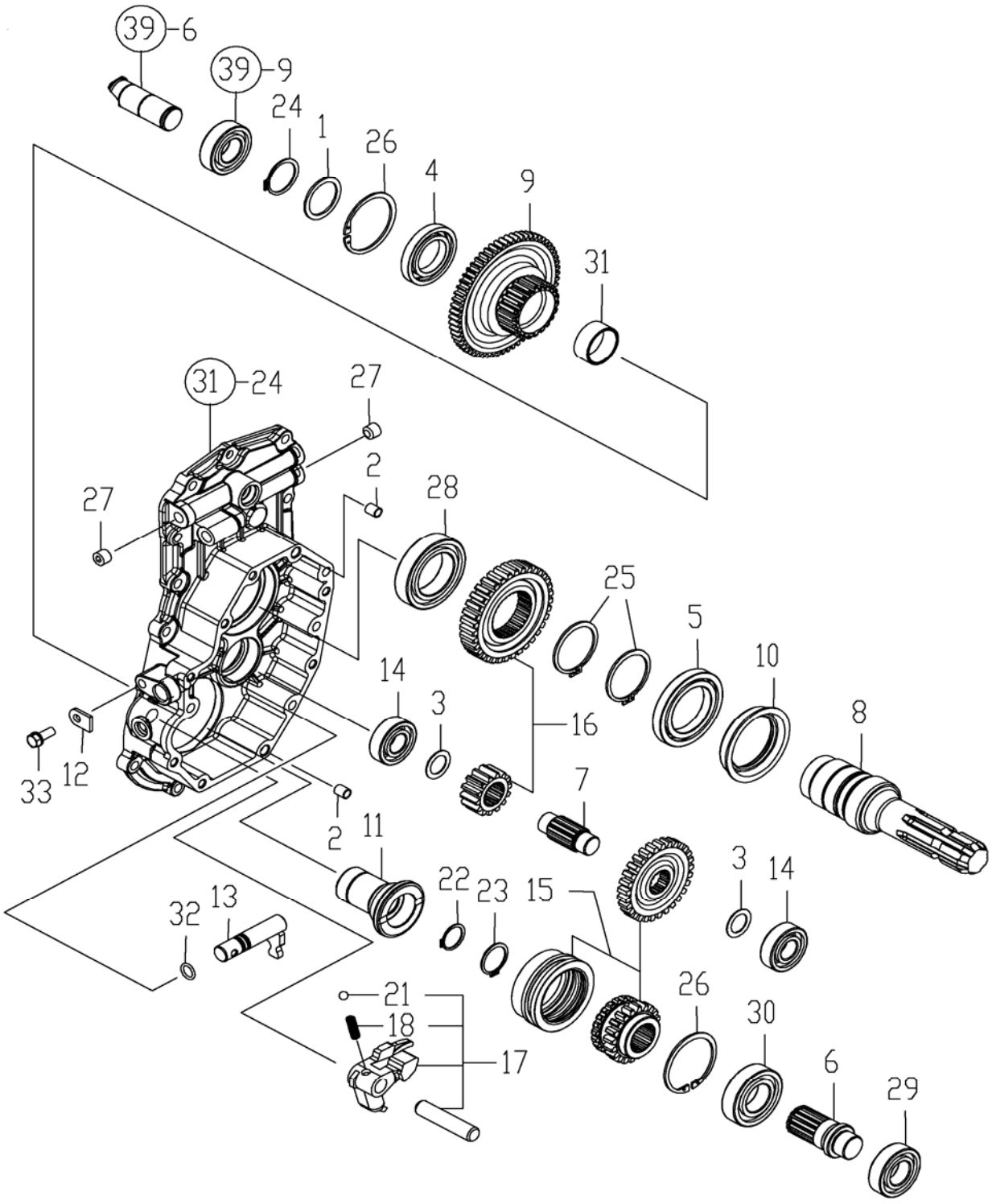

Copyright 2007 Cub Cadet Yanmar LLC

FIG. 42. REAR P.T.O. SHAFT

REF NO.	PART NUMBER	DESCRIPTION	QTY
1	CY-194464-22160	SPACER,CLUTCH SHAFT	1
2	CY-192157-24200	COLLAR, 8X10X11.5	2
3	CY-194200-25270	WASHER	2
4	CY-194454-25770	BEARING, 16007	1
5	CY-194454-25870	BEARING, 16010	1
6	CY-192157-26840	SHAFT, REAR PTO	1
7	CY-192157-26860	SHAFT, REAR PTO IDLE	1
8	CY-1A7052-26890	REAR PTO SHAFT	1
9	CY-192157-26960	GEAR, PTO Z=62 B	1
10	CY-192157-26980	SEAL, TCFY557214	1
11	CY-192157-26991	COLLAR, SPLINE	1
12	CY-194197-27681	PLATE, KEEP	1
13	CY-192157-27740	SHAFT, MBR CHANGE	1
14	CY-192159-31410	BEARING, 6204RSH2	2
15	CY-192157-99010	GEAR KIT, 20-29	1
16	CY-192157-99020	GEAR KIT, 14-35	1
17	CY-192157-99040	HORK KIT, MBR	1
18	CY-194145-27450	SPRING	1
21	CY-24190-100003	BALL, 5/16	1
22	CY-22242-000240	RING, 24	1
23	CY-22242-000290	RING, 29	1
24	CY-22242-000350	RING, 35	1
25	CY-22242-000500	RING, 50	2
26	CY-22252-000620	RING, 62	2
27	CY-23871-020000	PLUG, R02	3
28	CY-24101-060094	BEARING, 6009 NTN	1
29	CY-24101-062054	BEARING, 6205 NTN	1
30	CY-24101-062064	BEARING, 6206 NTN	1
31	CY-24161-354017	NEEDLE, 354017	1
32	CY-24311-000125	PACKING, P 12.5	1
33	CY-26016-080202	BOLT, 8 X 20	1

Copyright 2007 Cub Cadet Yanmar LLC

THIS PAGE INTENTIONALLY LEFT BLANK

Copyright 2007 Cub Cadet Yanmar LLC

FIG. 43. SHIFT

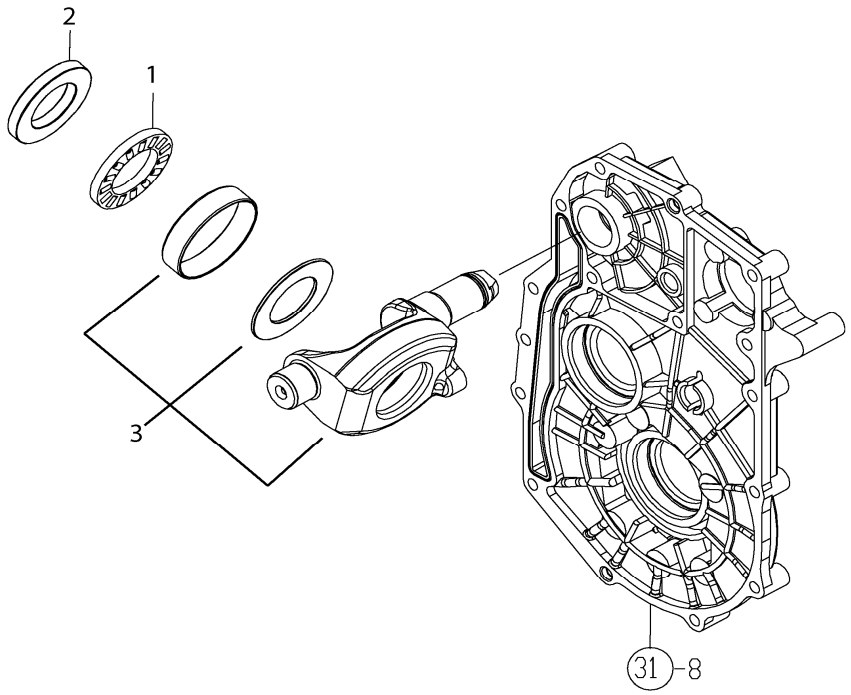

REF NO.	PART NUMBER	DESCRIPTION	QTY
1	CY-1A7050-24610	BEARING, THRUST	1
2	CY-192157-24620	PLATE, THRUST A	1
3	CY-1A7050-27110	SHIFT ASSEMBLY	1

Copyright 2007 Cub Cadet Yanmar LLC

FIG. 44. RANGE LEVER

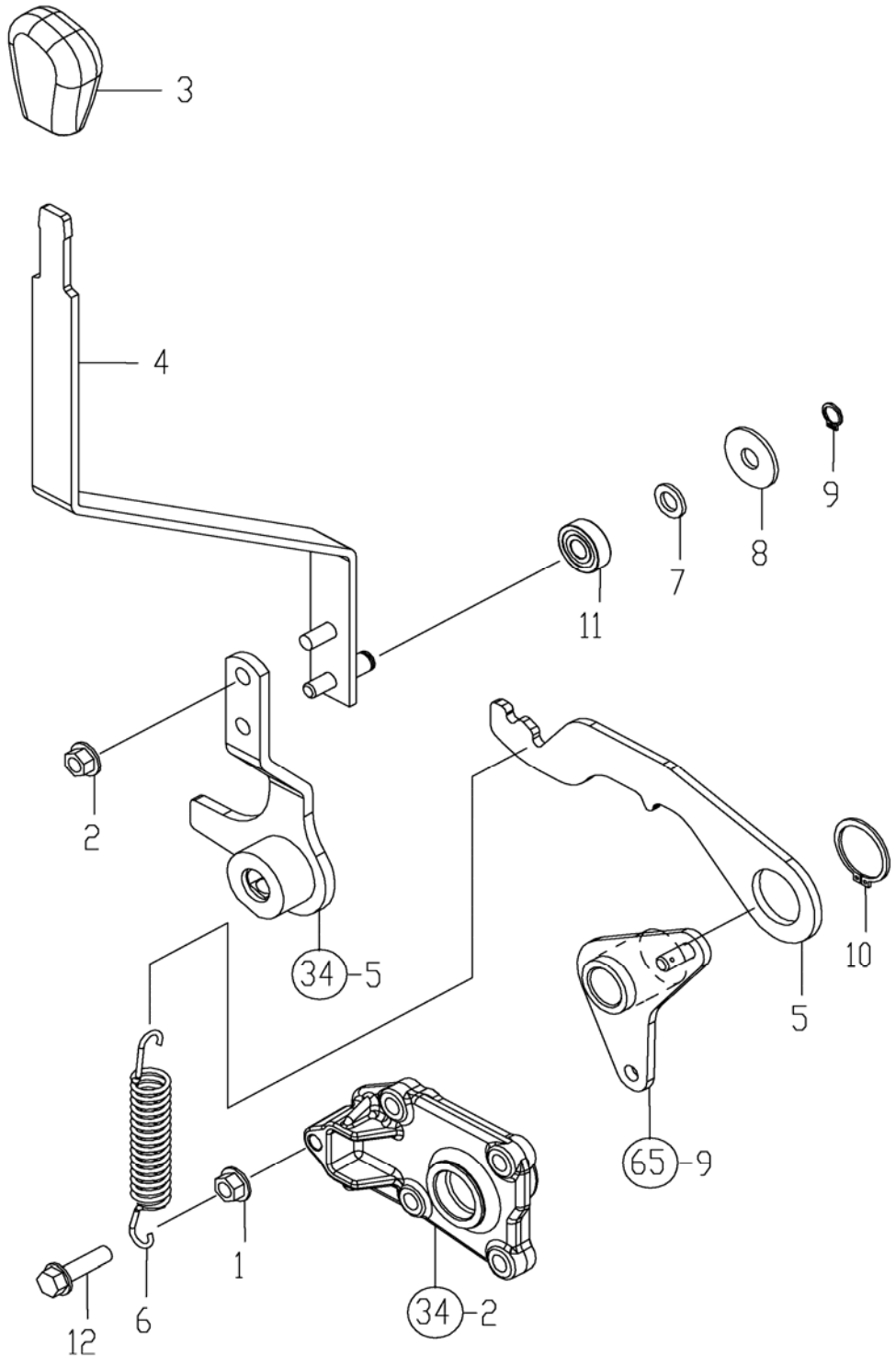

Copyright 2007 Cub Cadet Yanmar LLC

FIG. 44. RANGE LEVER

REF NO.	PART NUMBER	DESCRIPTION	QTY
1	CY-26716-080002	NUT, M8	1
2	CY-194990-22140	NUT, M8	2
3	CY-198200-27810	KNOB, ORANGE	1
4	CY-1A7880-27500	LEVER CMP,RANGE	1
5	CY-1A7880-27560	ARM,RANGE	1
6	CY-1A7880-27580	SPRING	1
7	CY-22117-100000	WASHER, 10	1
8	CY-22157-100000	WASHER, 10	1
9	CY-22242-000100	RING, 10	1
10	CY-22242-000300	RING, 30	1
11	CY-24104-060004	BEARING, 6000UU	1
12	CY-26106-080252	BOLT, 8 X 25	1

Copyright 2007 Cub Cadet Yanmar LLC

FIG. 45. CONTROL

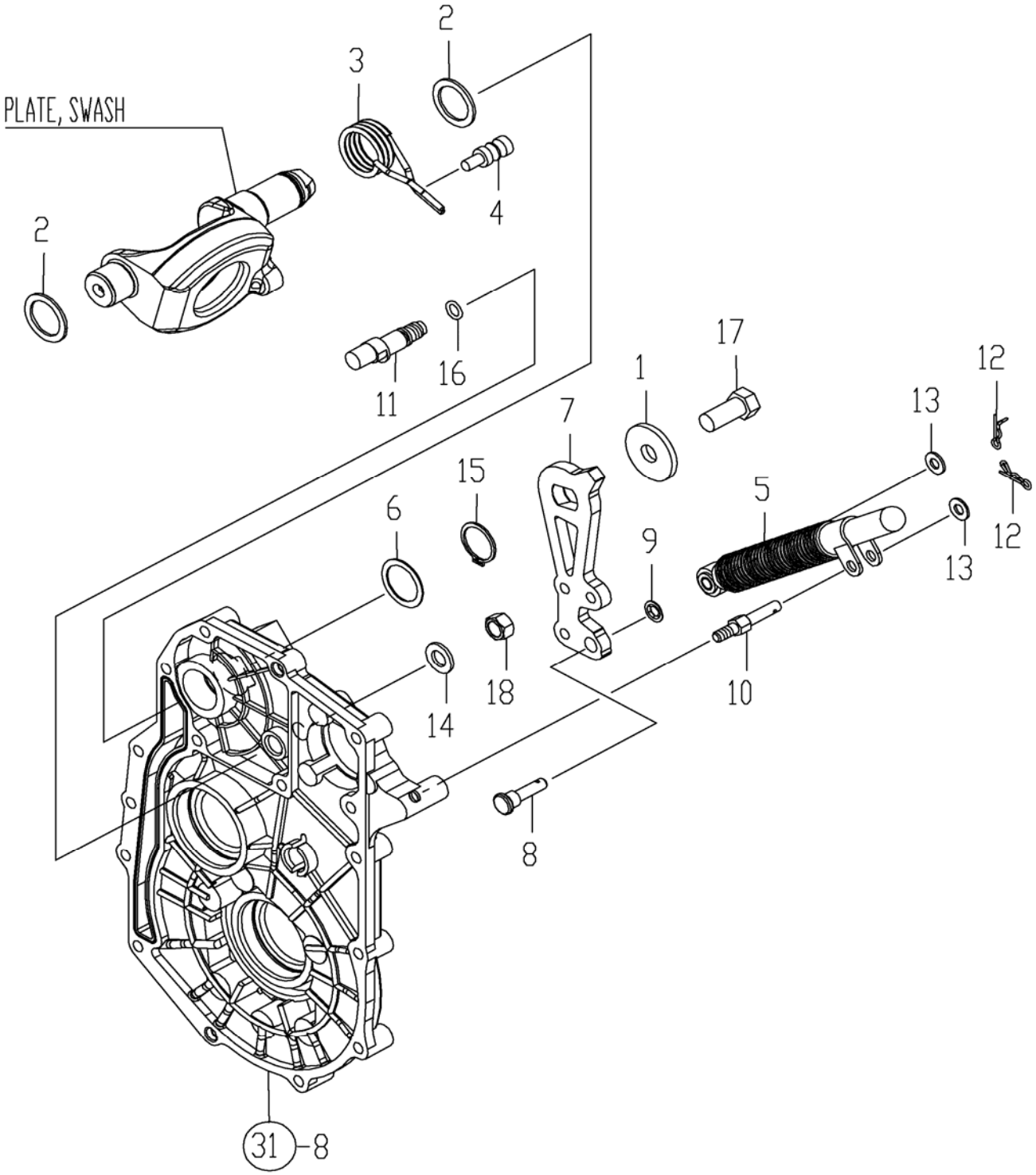

Copyright 2007 Cub Cadet Yanmar LLC

FIG. 45. CONTROL

REF NO.	PART NUMBER	DESCRIPTION	QTY
1	CY-172524-06850	WASHER, 44X14X4.5	1
2	CY-198167-24530	WASHER, 28X38X2	2
3	CY-192157-27510	SPRING, CENTERING	1
4	CY-192157-27520	FULCRUM	1
5	CY-1A7050-27530	ABSORBER, SHOCK	1
6	CY-192157-27550	WASHER, 29X35X1	1
7	CY-1A7050-27600	ARM, CONTROL	1
8	CY-1A7050-27610	PIN(CONTROL ARM	1
9	CY-1A7050-27620	PUSH NUT 7.8	1
10	CY-192154-29640	STUD	1
11	CY-192154-29700	FULCRUM, 10	1
12	CY-1C6281-52320	PIN, SNAP	2
13	CY-22137-080000	WASHER, 8	2
14	CY-22137-120000	WASHER, 12	1
15	CY-22242-000280	RING, 28	1
16	CY-24311-240100	PACKING, P 10A	1
17	CY-26116-140302	BOLT, 14 X 30	1
18	CY-26776-120002	NUT, 12	1

Copyright 2007 Cub Cadet Yanmar LLC

THIS PAGE INTENTIONALLY LEFT BLANK

Copyright 2007 Cub Cadet Yanmar LLC

FIG. 46. P.T.O. LEVER

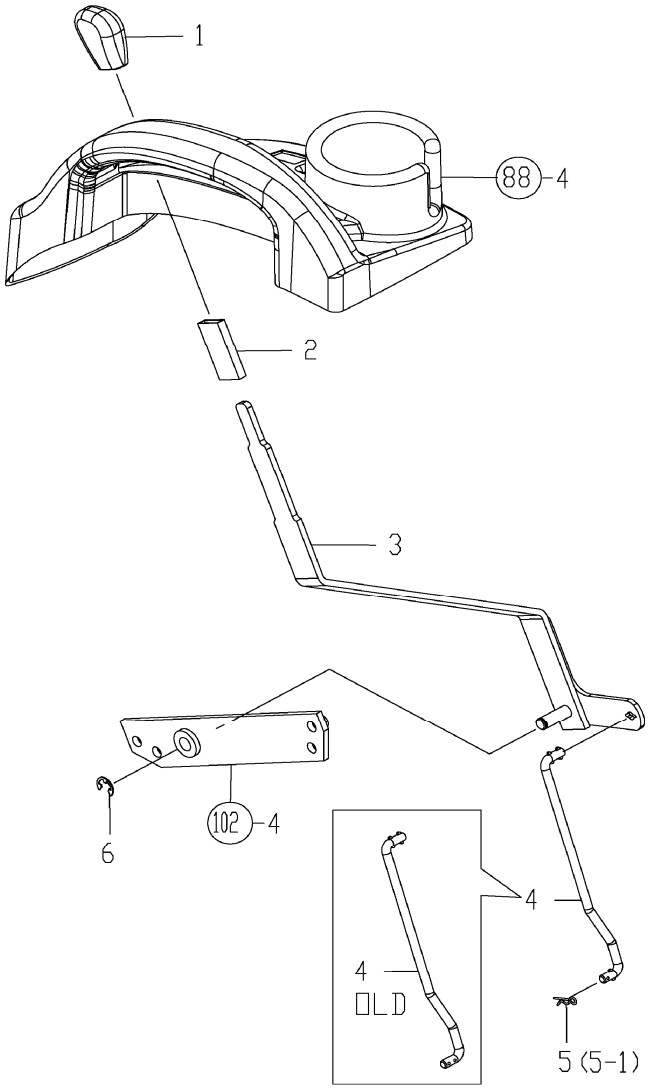

REF NO.	PART NUMBER	DESCRIPTION	QTY
1	CY-198200-27910	KNOB, YELLOW	1
2	CY-198162-47630	TUBE, PROTECTIVE	1
3	CY-1A7880-27800	LEVER CMP, PTO	1
4	CY-1A7880-27850	ROD, PTO	1
5	CY-22372-080000	PIN, SNAP	1
5-1	CY-22372-080000	PIN, SNAP	1
6	CY-22272-000100	RING, 10	1

Copyright 2007 Cub Cadet Yanmar LLC

FIG. 47. GEARBOX

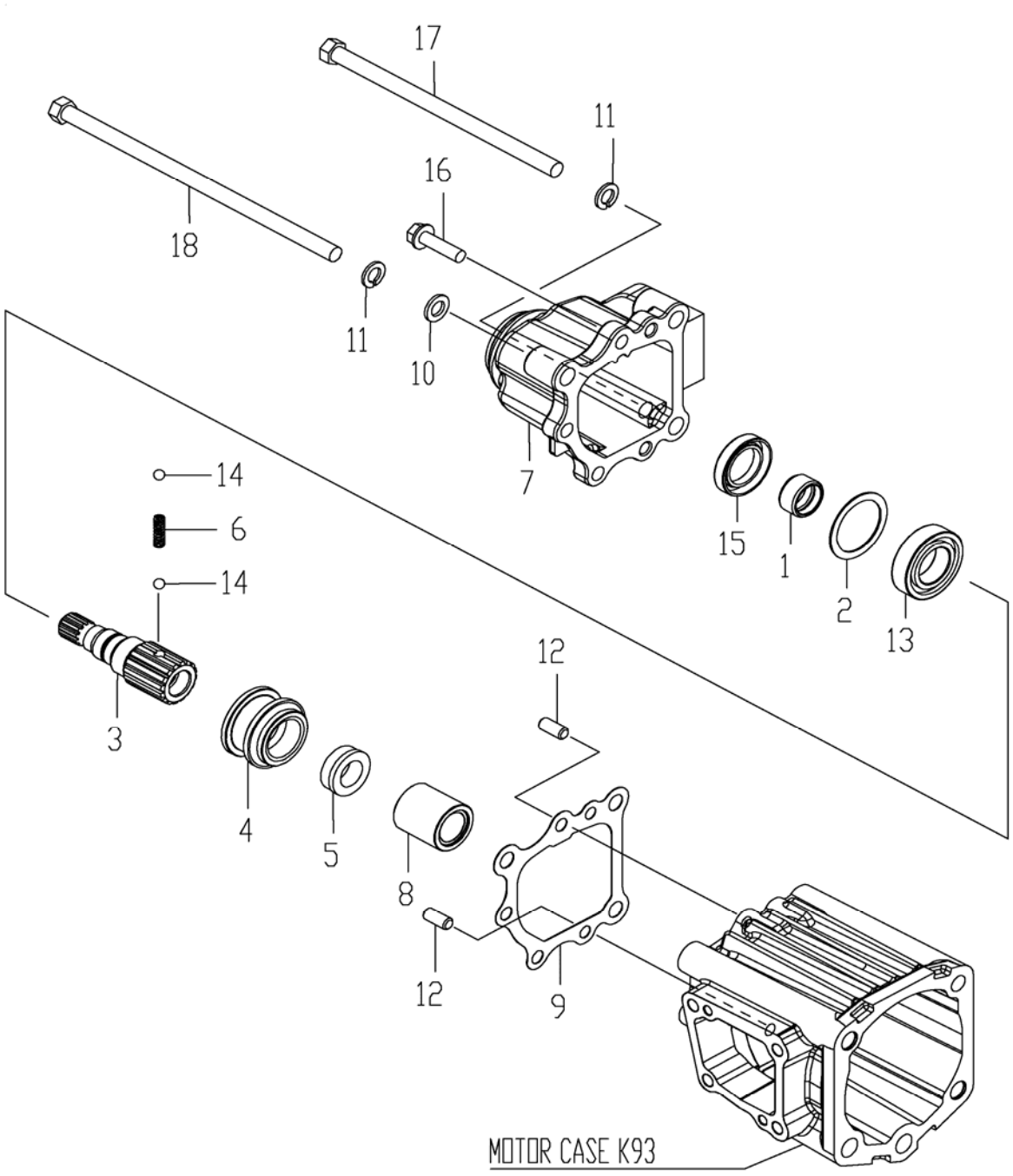

Copyright 2007 Cub Cadet Yanmar LLC

FIG. 47. GEARBOX

REF NO.	PART NUMBER	DESCRIPTION	QTY
1	CY-194855-25290	SLEEVE, SI20X25X13	1
2	CY-1A7050-28110	WASHER, 36X46X1	1
3	CY-1A7050-28211	SHAFT, FRONT DRIVE	1
4	CY-198165-28240	COLLAR, FRONT SHIFT	1
5	CY-198165-28220	COLLAR, FRONT SPLINE	1
6	CY-194311-28230	SPRING, 21.2	1
7	CY-1A7050-28250	COVER, FRONT	1
8	CY-1A7050-28260	SPACER, 20X33X285	1
9	CY-1A7050-28560	PACKING, FRONT COVER	1
10	CY-22117-100000	WASHER, 10	2
11	CY-22287-100000	WASHER, 10	3
12	CY-22312-080160	PIN, 8 X 16	2
13	CY-24101-060054	BEARING, 6005 NTN	1
14	CY-24190-080001	BALL, 1/ 4	2
15	CY-24421-254008	SEAL, TC254008	1
16	CY-26106-080302	BOLT, 8 X 30	3
17	CY-26116-101802	BOLT, 10 X 180	1
18	CY-26116-102202	BOLT, 10 X 220	2

Copyright 2007 Cub Cadet Yanmar LLC

FIG. 48. 2-4WD LEVER

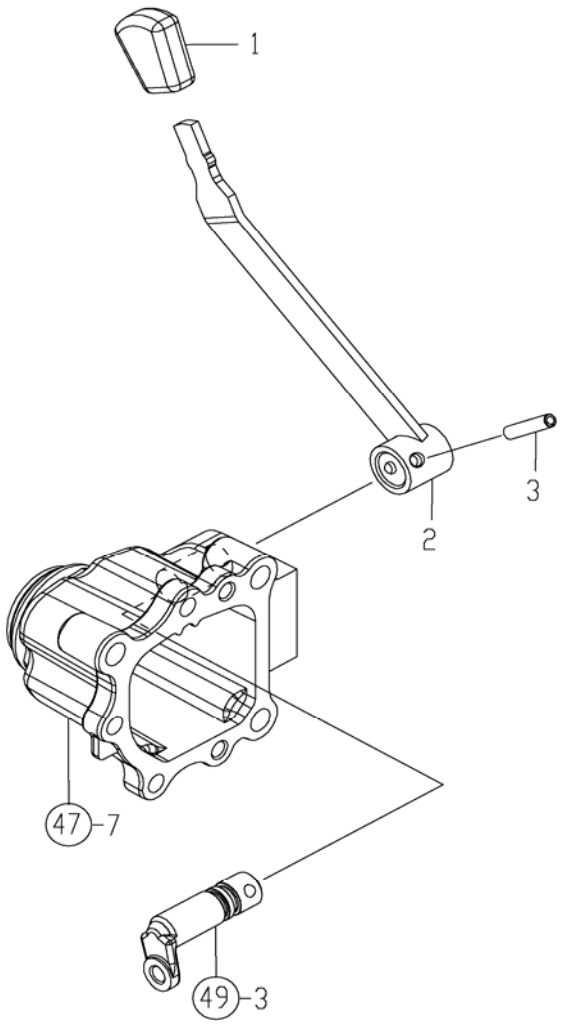

REF NO.	PART NUMBER	DESCRIPTION	QTY
1	CY-198273-28520	KNOB,	1
2	CY-1A7880-28300	LEVER,4WD CMP	1
3	CY-22351-060032	PIN, 6.0A X 32	1

Copyright 2007 Cub Cadet Yanmar LLC

FIG. 49. MFWD SHIFT

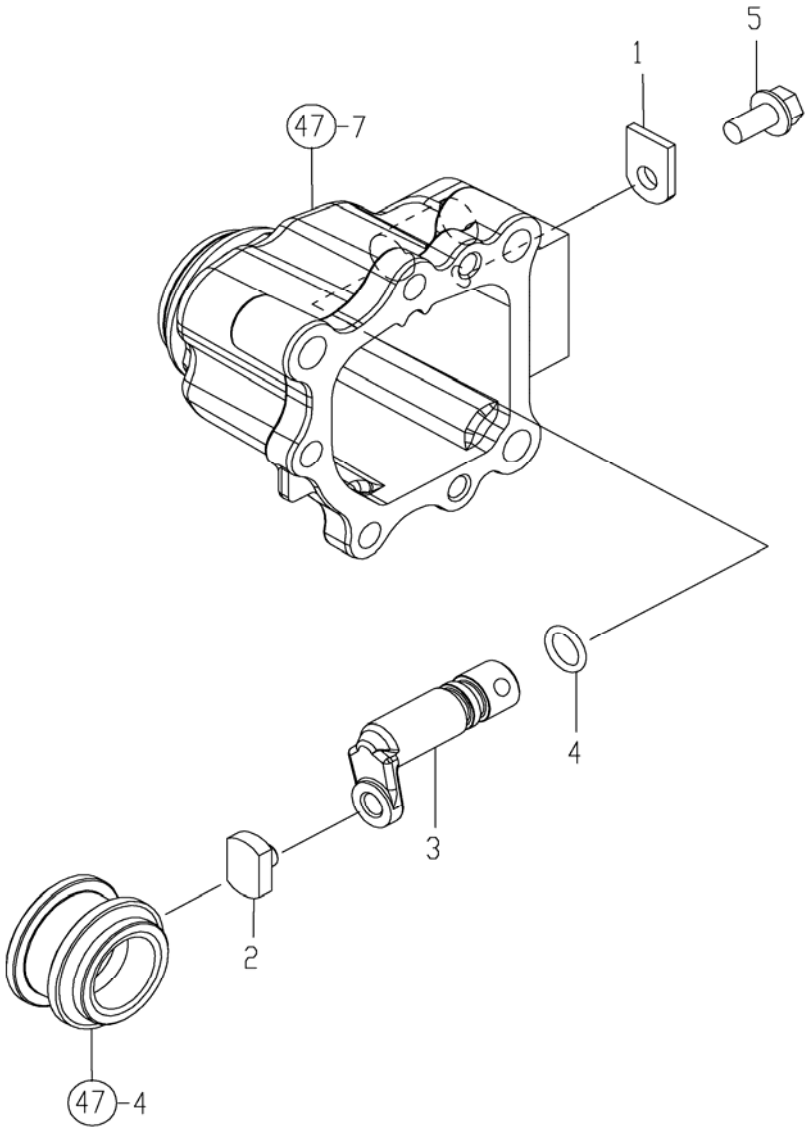

REF NO.	PART NUMBER	DESCRIPTION	QTY
1	CY-194197-27681	PLATE, KEEP	1
2	CY-1A7050-28331	BLOCK, SHIFT FRONT	1
3	CY-1A7050-28351	SHIFT, SHAFT 4WD	1
4	CY-24311-000125	PACKING, P 12.5	1
5	CY-26106-080162	BOLT, 8 X 16	1

Copyright 2007 Cub Cadet Yanmar LLC

FIG. 50. HYDROSTACTIC (HST) PEDAL

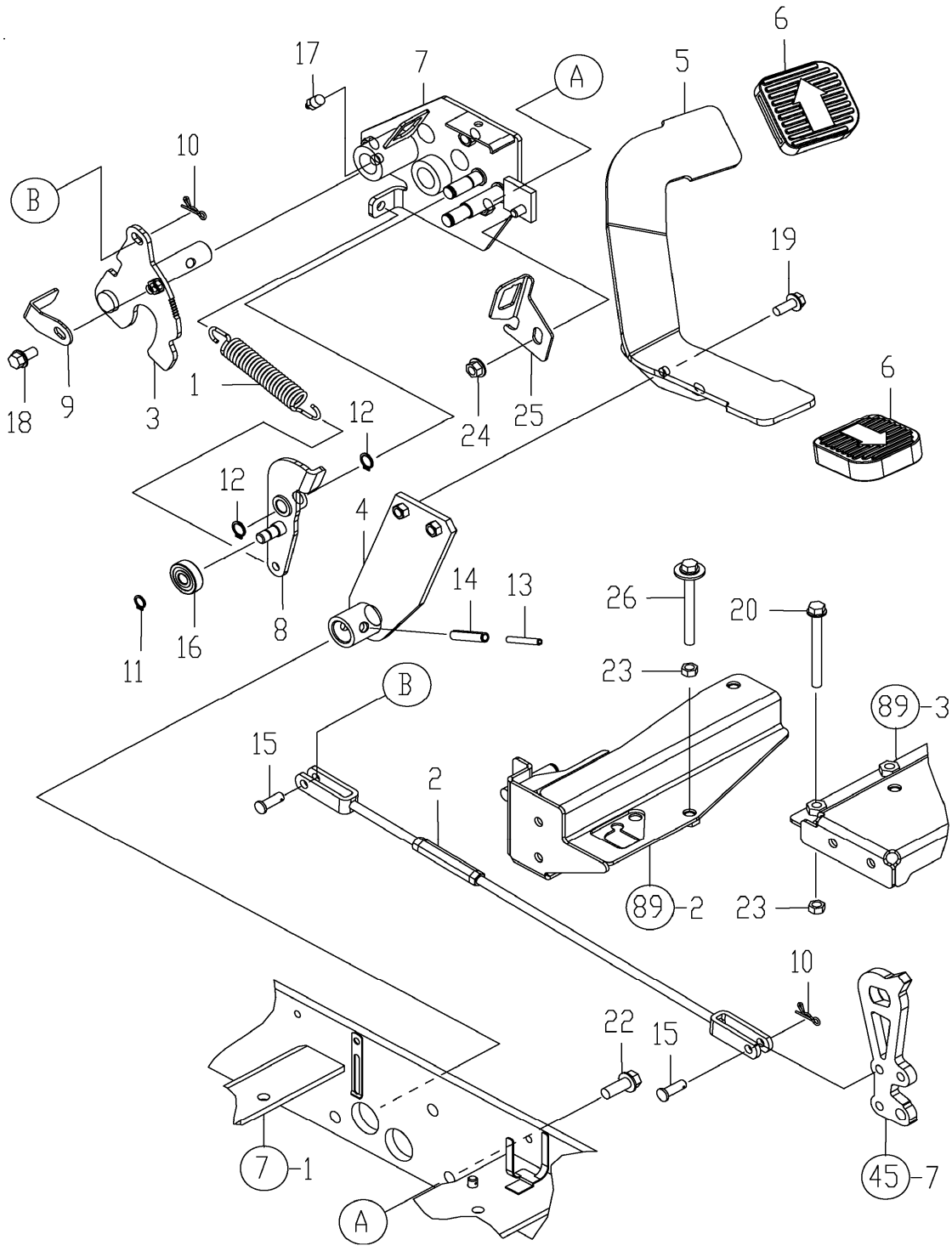

Copyright 2007 Cub Cadet Yanmar LLC

FIG. 50. HYDROSTACTIC (HST) PEDAL

REF NO.	PART NUMBER	DESCRIPTION	QTY
1	CY-1A7790-01160	SPRING, RETURN	1
2	CY-1A7880-29400	ROD ASSY,HST	1
3	CY-1A7880-29500	ARM CMP,HST	1
4	CY-1A7880-29540	PEDAL,ARM CMP	1
5	CY-1A7880-29570	PEDAL ,HST CMP	1
6	CY-1A7880-29600	HEAD,PEDAL	2
7	CY-1A7880-29640	FULCRUM,PEDAL CMP	1
8	CY-1A7880-29720	ARM,SWITCH CMP	1
9	CY-1A7880-29780	ARM,SWITCH	1
10	CY-1C6281-52320	PIN, SNAP	2
11	CY-22242-000100	RING, 10	1
12	CY-22242-000120	RING, 12	2
13	CY-22351-050040	PIN, 5.0A X 40	1
14	CY-22351-080040	PIN, 8.0A X 40	1
15	CY-22487-080200	PIN, 8 X 20	2
16	CY-24104-062004	BEARING, 6200UU	1
17	CY-24761-020000	FITTING, PT 1/8	1
18	CY-26106-080162	BOLT, 8 X 16	1
19	CY-26106-080202	BOLT, 8 X 20	2
20	CY-26106-080802	BOLT, 8 X 80	1
21	CY-26106-080902	BOLT, 8 X 90	1
22	CY-26106-100252	BOLT, 10 X 25	3
23	CY-26716-080002	NUT, 8	2
24	CY-194990-22140	NUT, M8	1
25	CY-1A7880-29450	ARM SWITCH N	1
26	CY-1A7880-29490	BOLT, HST PEDAL	1

Copyright 2007 Cub Cadet Yanmar LLC

FIG. 51. HYDRAULIC CRUISE LINK

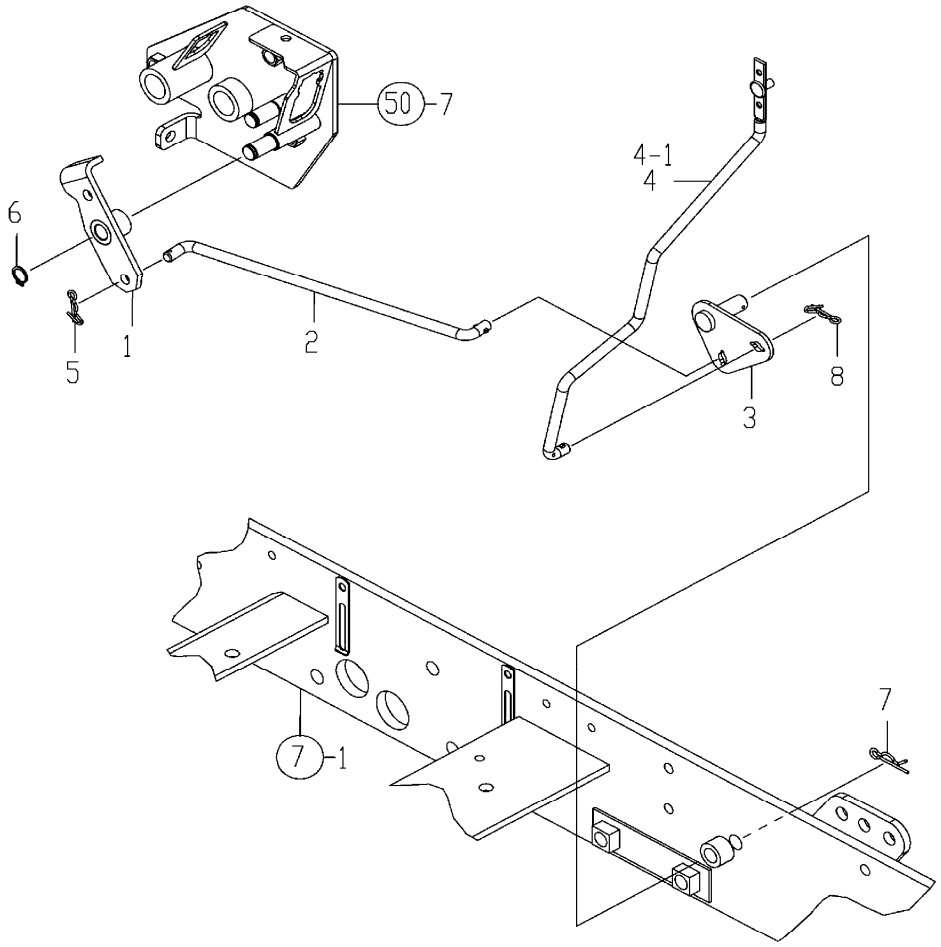

REF NO.	PART NUMBER	DESCRIPTION	QTY
1	CY-1A7880-29800	ARM A,CRUISE CMP	1
2	CY-1A7880-29830	ROD,A CRUISE	1
3	CY-1A7880-29840	LINK,CRUISE CMP	1
4	CY-1A7880-29870	ROD B,CRUISE CMP xxxxx & before	1
4-1	CY-1A7880-29871	ROD B, CRUISE CMP	1
5	CY-1C6281-52320	PIN, SNAP	1
6	CY-22242-000120	RING, 12	1
7	CY-22372-120000	PIN, 12	1
8	CY-1C6281-52320	PIN, COME OFF SNAP xxxxx & after	1

Copyright 2007 Cub Cadet Yanmar LLC

FIG. 52. CRUISE LEVER

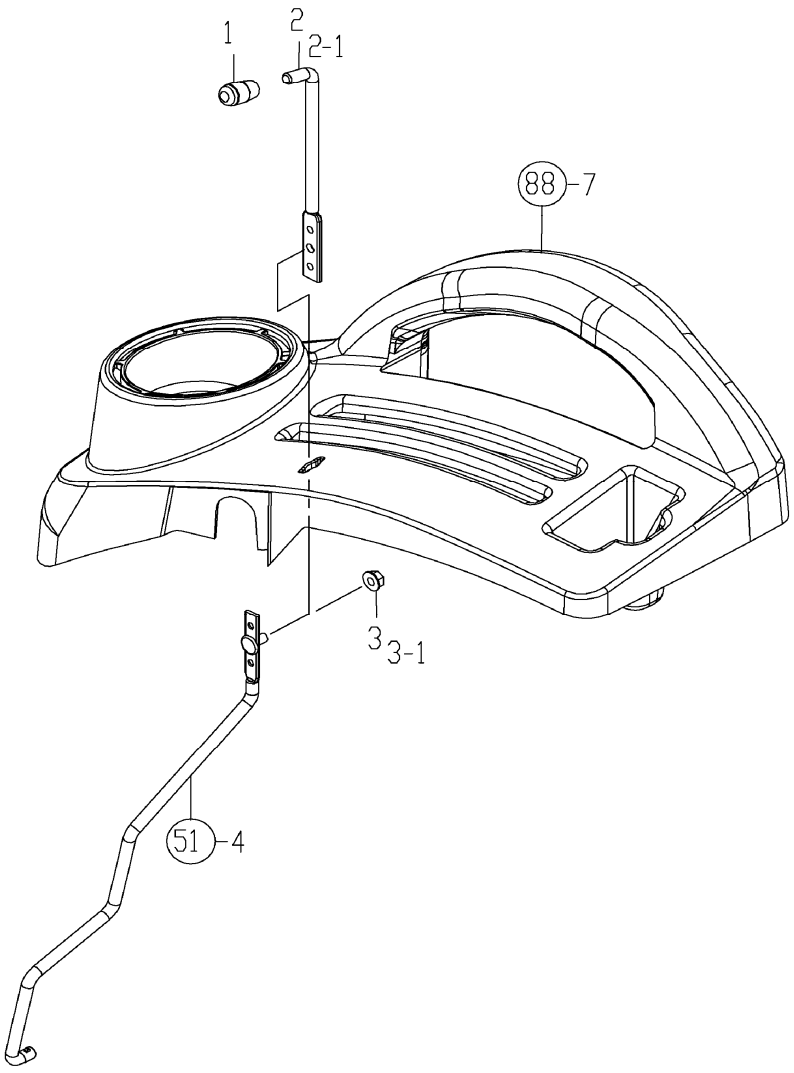

REF NO.	PART NUMBER	DESCRIPTION	QTY
1	CY-194550-27030	KNOB	1
2	CY-1A7880-29900	ROD,C CRUISE xxxxxx & before	1
2-1	CY-1A7880-29901	ROD,C CRUISE xxxxxx & after	1
3	CY-26366-060002	NUT, 6 xxxxxx & before	1
3-1	CY-194990-22140	NUT W/WASHER 8	1

Copyright 2007 Cub Cadet Yanmar LLC

FIG. 53. GEAR PUMP

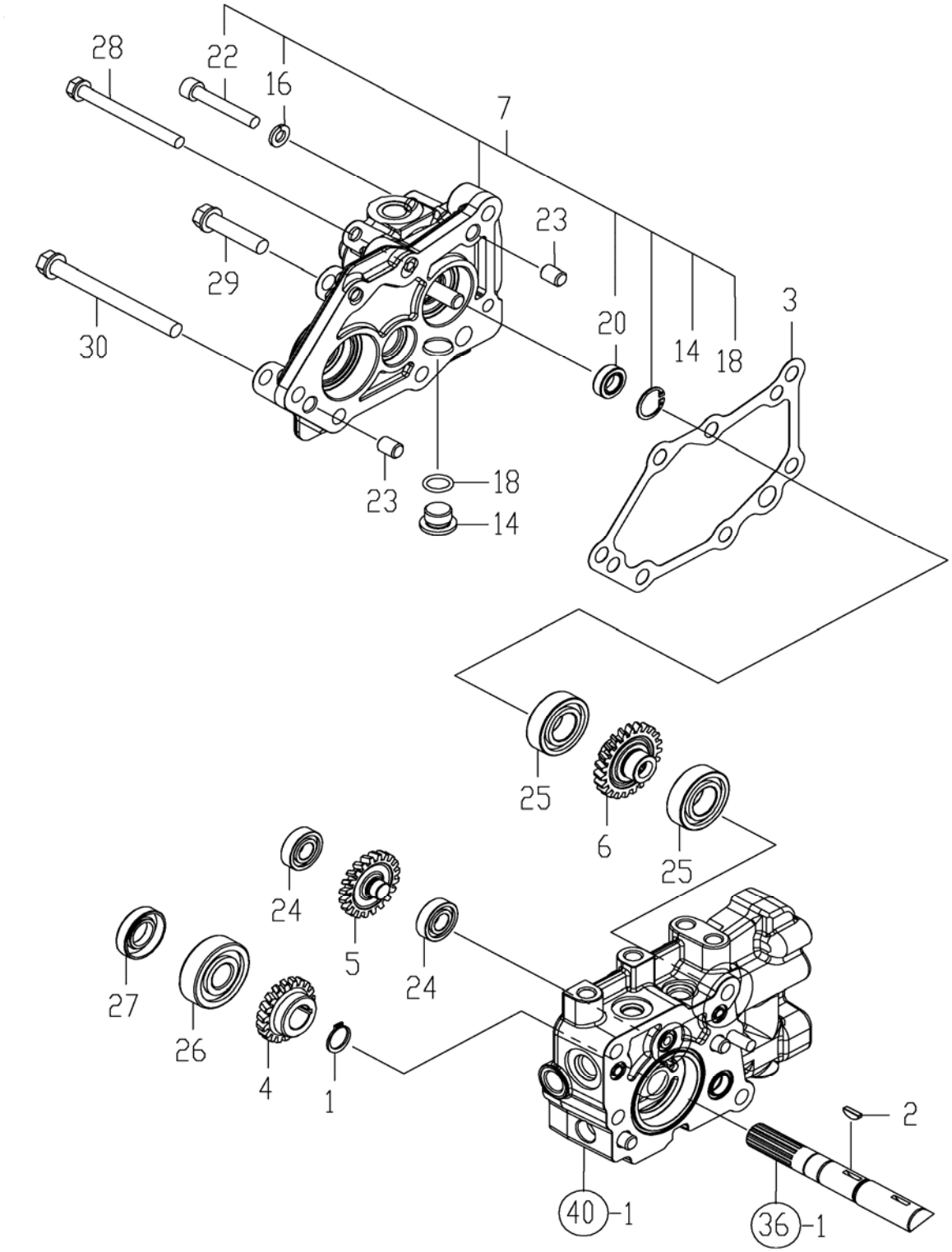

Copyright 2007 Cub Cadet Yanmar LLC

FIG. 53. GEAR PUMP

REF NO.	PART NUMBER	DESCRIPTION	QTY
1	CY-192167-25310	CIRCLIP, 17	1
2	CY-192157-26440	KEY, 13X3.2	1
3	CY-187K06-29620	PAKING (PUMP COVER	1
4	CY-187K06-29860	GEAR 1 (PUMP	1
5	CY-187K06-29870	GEAR 2 (PUMP	1
6	CY-187K06-29880	GEAR 3 (PUMP	1
7	CY-187K06-29900	PWS-5CG SUB CMP	1
14	CY-1A6750-29850	PLUG, PF3/8	1
16	CY-22217-080000	WASHER, 8	3
18	CY-24311-000140	PACKING, P 14.0	1
20	CY-24421-122207	SEAL, TC122207	1
22	CY-26450-080502	BOLT, 8 X 50	3
23	CY-22312-100120	PIN, 10 X 12	2
24	CY-24101-060014	BEARING, 6001	2
25	CY-24101-060044	BEARING, 6004	2
26	CY-24101-063034	BEARING, 6303	1
27	CY-24421-173508	SEAL, TC173508	1
28	CY-26016-080852	BOLT, 8 X 85	1
29	CY-26016-100452	BOLT, 10 X 45	3
30	CY-26016-101052	BOLT, 10 X 105	1

Copyright 2007 Cub Cadet Yanmar LLC

FIG. 54. INPUT GEAR

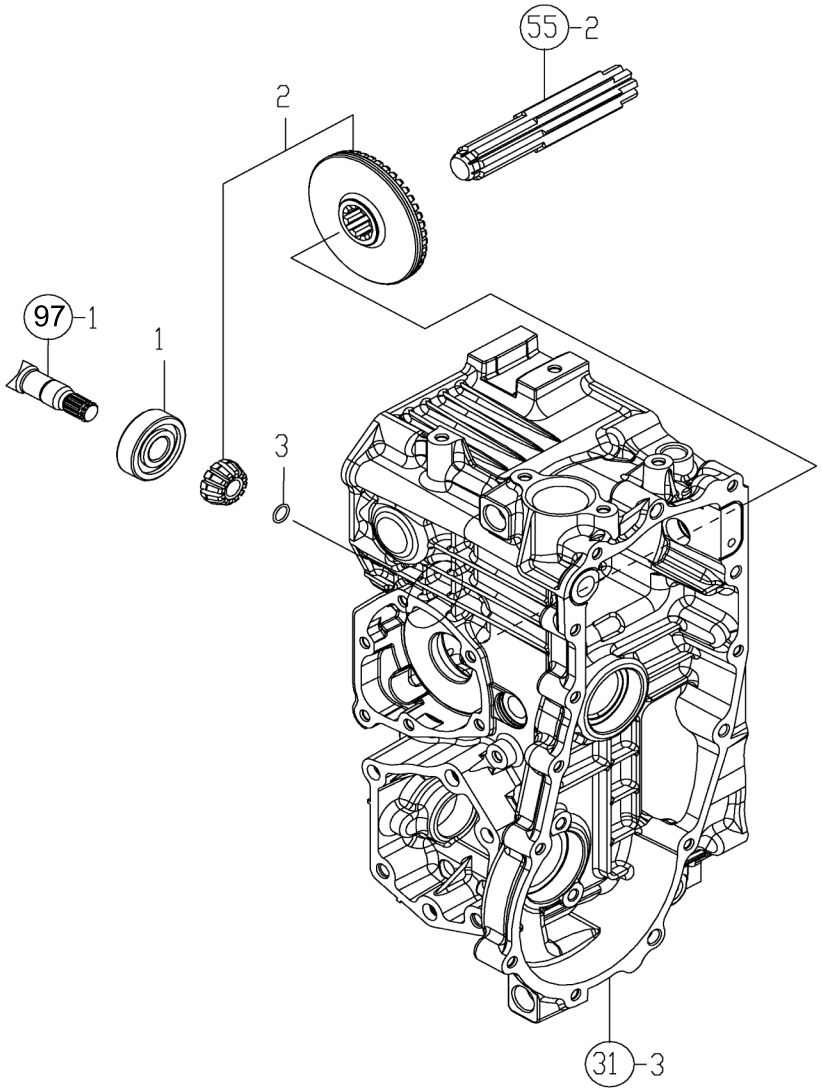

REF NO.	PART NUMBER	DESCRIPTION	QTY
1	CY-1A6780-13910	BEARING, 6303RSH2	1
2	CY-1A7050-31100	GEAR KIT, INPUT	1
3	CY-22207-012160	RING, 12 X 1.6	1

Copyright 2007 Cub Cadet Yanmar LLC

FIG. 55. REAR DIFFERENTIAL GEAR

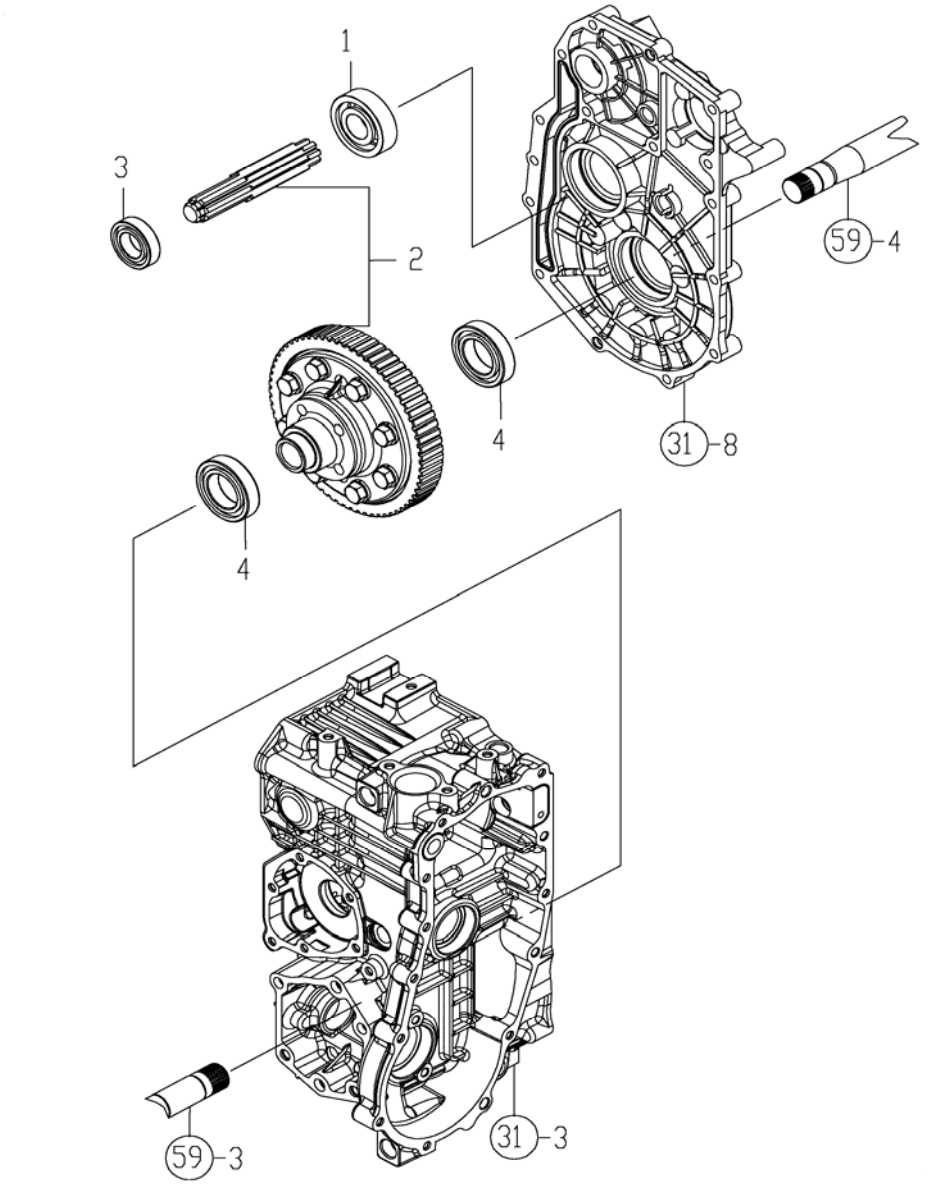

REF NO.	PART NUMBER	DESCRIPTION	QTY
1	CY-194555-25880	BEARING, TMB305	1
2	CY-1A7050-33390	GEAR KIT, FINAL	1
3	CY-1A7050-33460	BEARING, 6005SH2	1
4	CY-24101-060074	BEARING, 6007 NTN	2

Copyright 2007 Cub Cadet Yanmar LLC

FIG. 56. REAR AXLE HOUSING

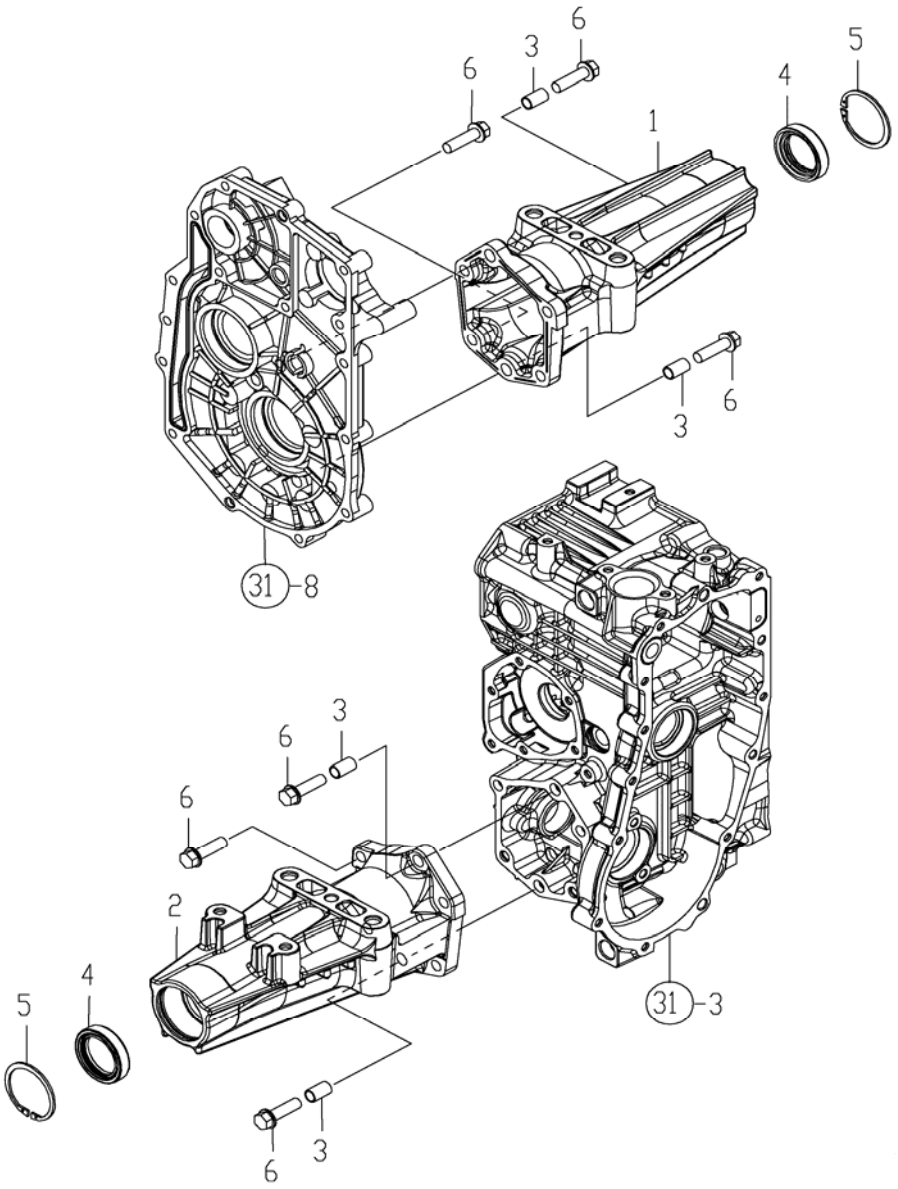

REF NO.	PART NUMBER	DESCRIPTION	QTY
1	CY-1A7050-32320	HOUSING, REAR AXLE R	1
2	CY-1A7051-32320	HOUSING, REAR AXLE	1
3	CY-192157-32360	COLLAR, 10X12X20	4
4	CY-192157-32370	SEAL, TC395511	2
5	CY-22252-000550	RING, 55	2
6	CY-26106-100352	BOLT, 10 X 35	12

Copyright 2007 Cub Cadet Yanmar LLC

FIG. 57. DIFFERENTIAL LOCK

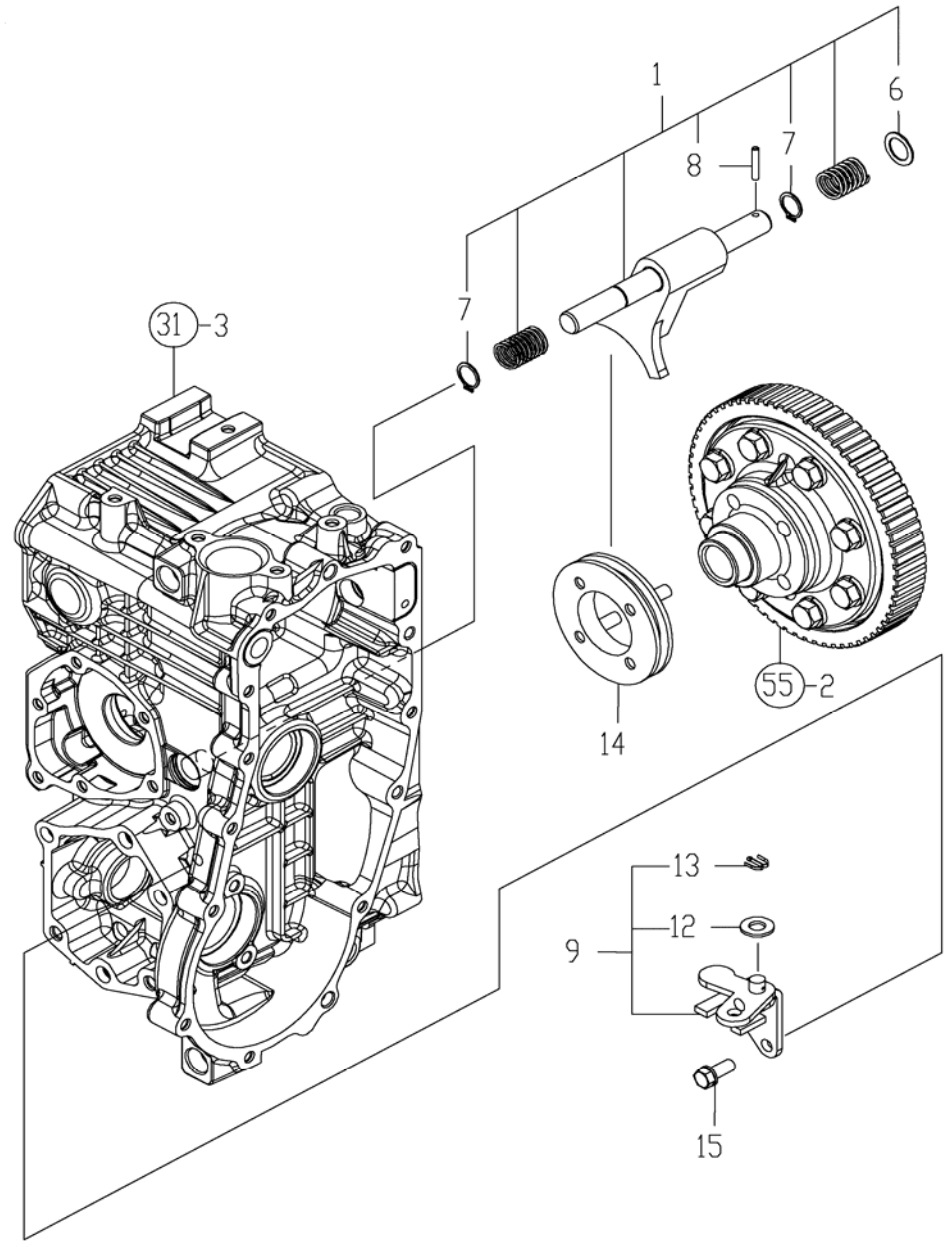

REF NO.	PART NUMBER	DESCRIPTION	QTY
1	CY-192157-33101	FORK KIT, DIFF.LOCK	1
6	CY-1C6320-52210	SPACER, 16.5X24X1	1
7	CY-22242-000160	RING, 16	2
8	CY-22351-040025	PIN, 4.0A X 25	1
9	CY-192157-33110	FULCRUM KIT, DIFF.	1
12	CY-22137-100000	WASHER, 10	1
13	CY-22417-200200	PIN, 2.0 X 20	1
14	CY-194854-33110	SLIDER, DIFF.LOCK	1
15	CY-26016-080202	BOLT, 8 X 20	2

Copyright 2007 Cub Cadet Yanmar LLC

FIG. 58. DIFFERENTIAL PEDAL

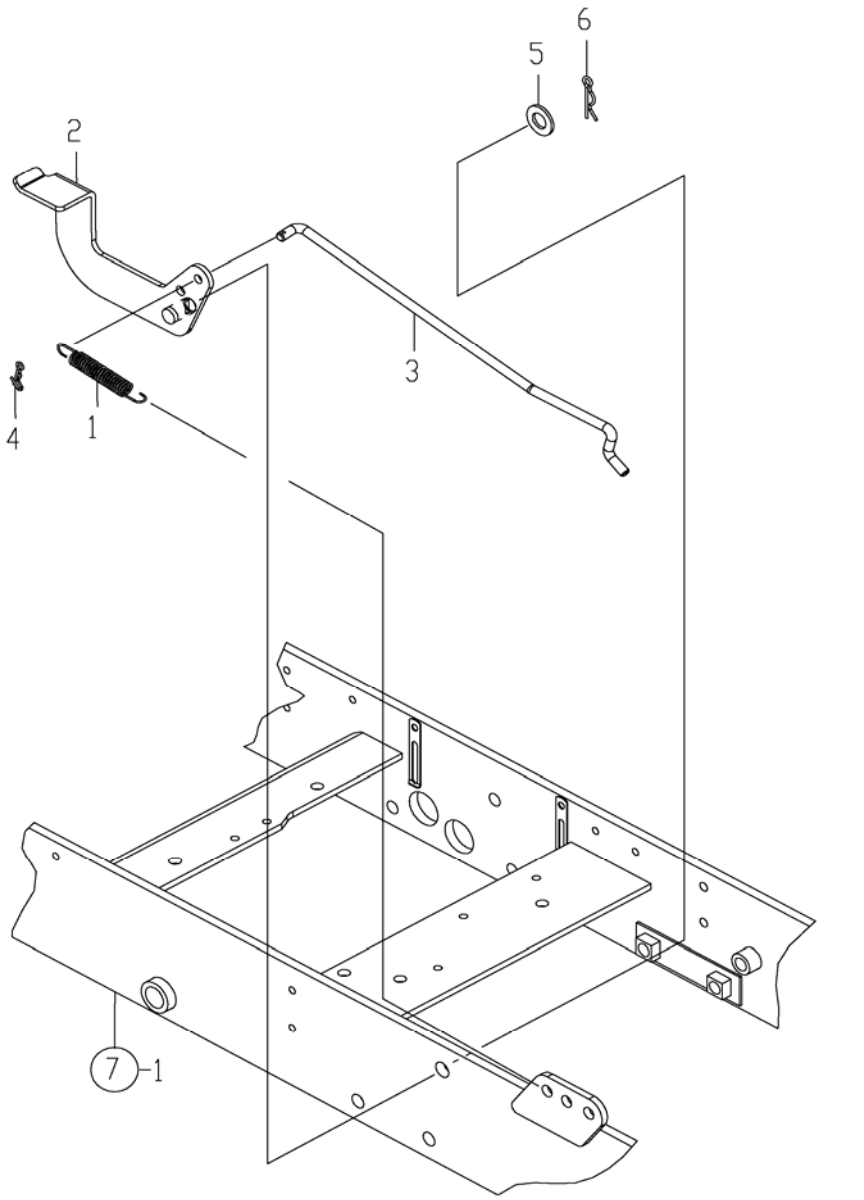

REF NO.	PART NUMBER	DESCRIPTION	QTY
1	CY-1A7790-01160	SPRING, RETURN	1
2	CY-1A7880-33200	PEDAL CMP,DIFF.	1
3	CY-1A7880-33250	ROD	1
4	CY-1C6281-52320	PIN, SNAP	1
5	CY-22137-140000	WASHER, 14	1
6	CY-22372-140000	PIN, 14	1

Copyright 2007 Cub Cadet Yanmar LLC

FIG. 59. REAR AXLE SHAFT

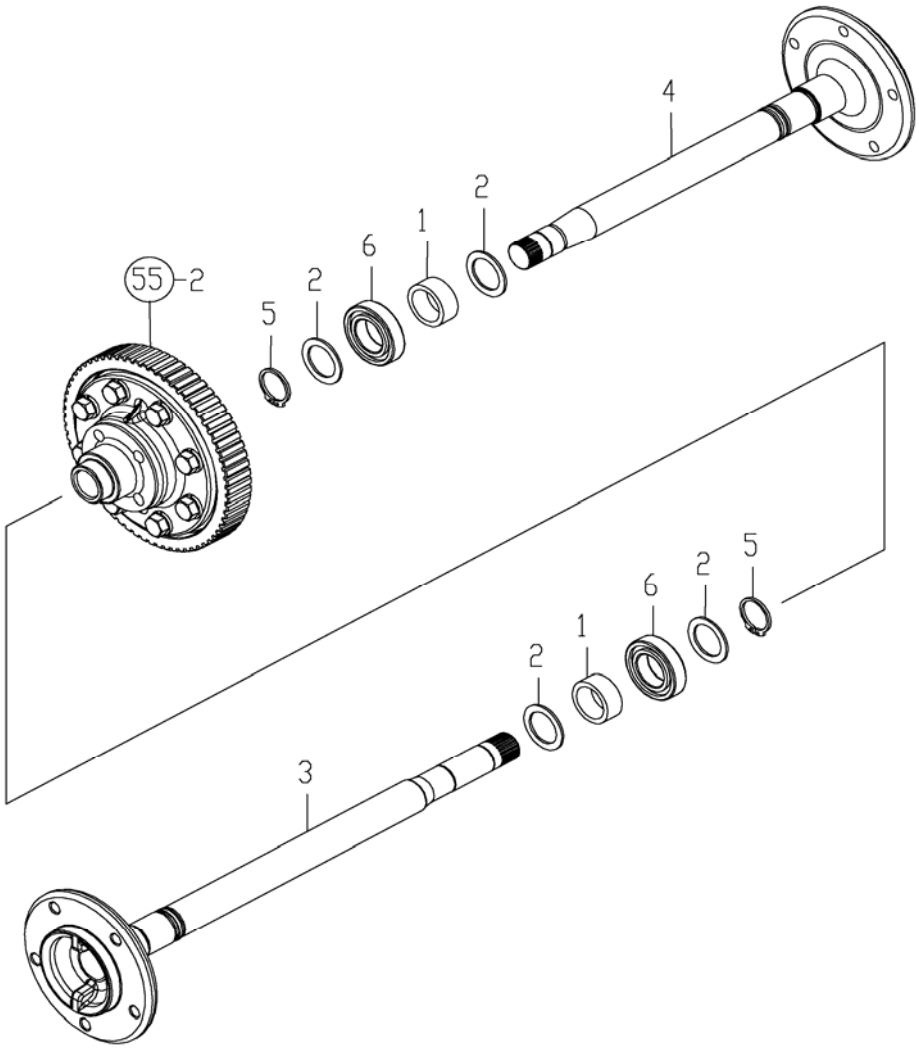

REF NO.	PART NUMBER	DESCRIPTION	QTY
1	CY-194440-11880	SLEEVE, 30X39X16	2
2	CY-198327-26560	COLLAR, 30X42X2	4
3	CY-1A7050-34110	SHAFT, REAR AXLE L	1
4	CY-1A7050-34120	SHAFT, REAR AXLE R	1
5	CY-192157-34130	CIRCLIP, 29	2
6	CY-24101-060064	BEARING, 6006 NTN	2

Copyright 2007 Cub Cadet Yanmar LLC

FIG. 60. REAR WHEEL TIRE (BAR)

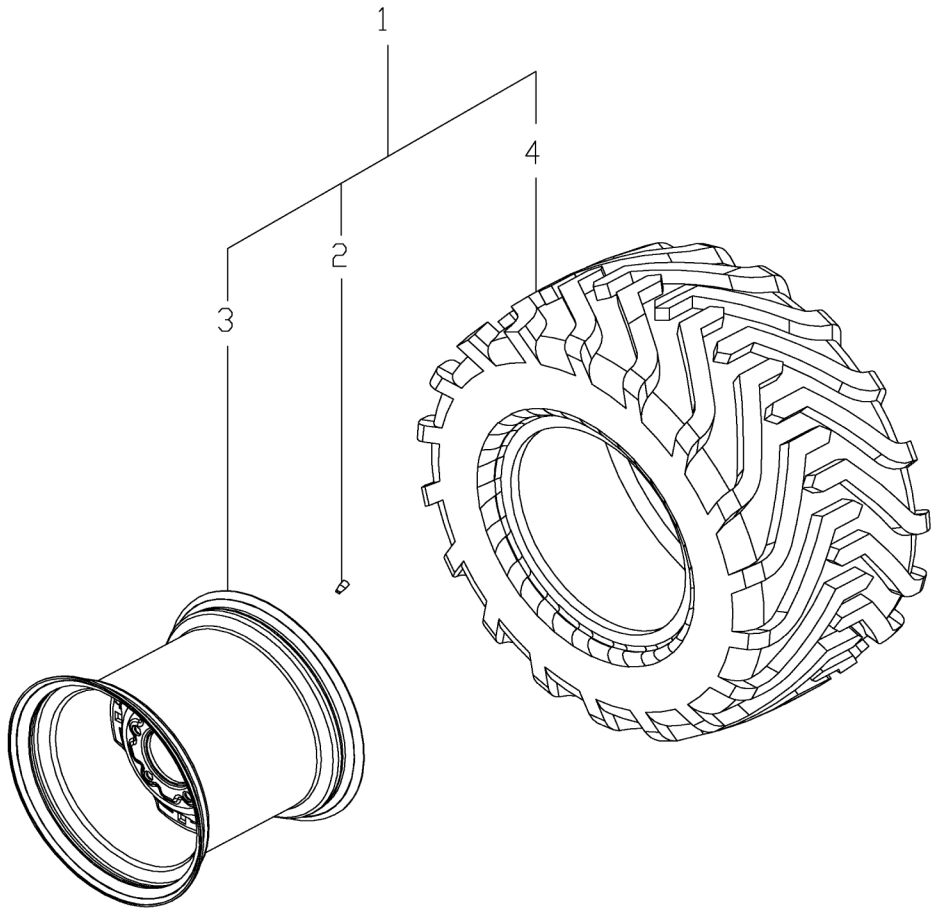

REF NO.	PART NUMBER	DESCRIPTION	QTY
1	N/A	R1 REAR TIRE KIT	2
2	CY-1A7880-14840	VALVE	2
3	CY-1A7880-34830	WHEEL 12X10.5	2
4	CY-1A7880-34920	TIRE,26X12-12 R1	2

Copyright 2007 Cub Cadet Yanmar LLC

FIG. 61. REAR WHEEL TIRE (TURF)

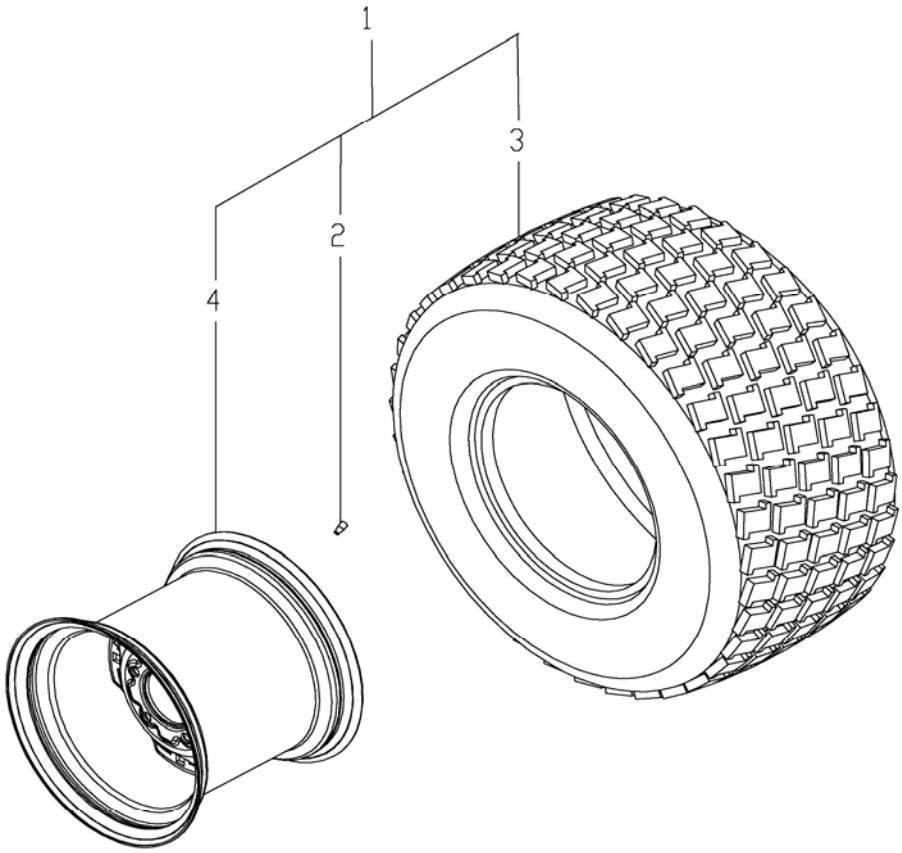

REF NO.	PART NUMBER	DESCRIPTION	QTY
1	N/A	R3 REAR TIRE KIT	2
2	CY-1A7880-14840	VALVE	2
3	CY-1A7880-34710	TIRE,26X12-12 R3	2
4	CY-1A7880-34830	WHEEL 12X10.5	2

Copyright 2007 Cub Cadet Yanmar LLC

FIG. 62. REAR WHEEL TIRE

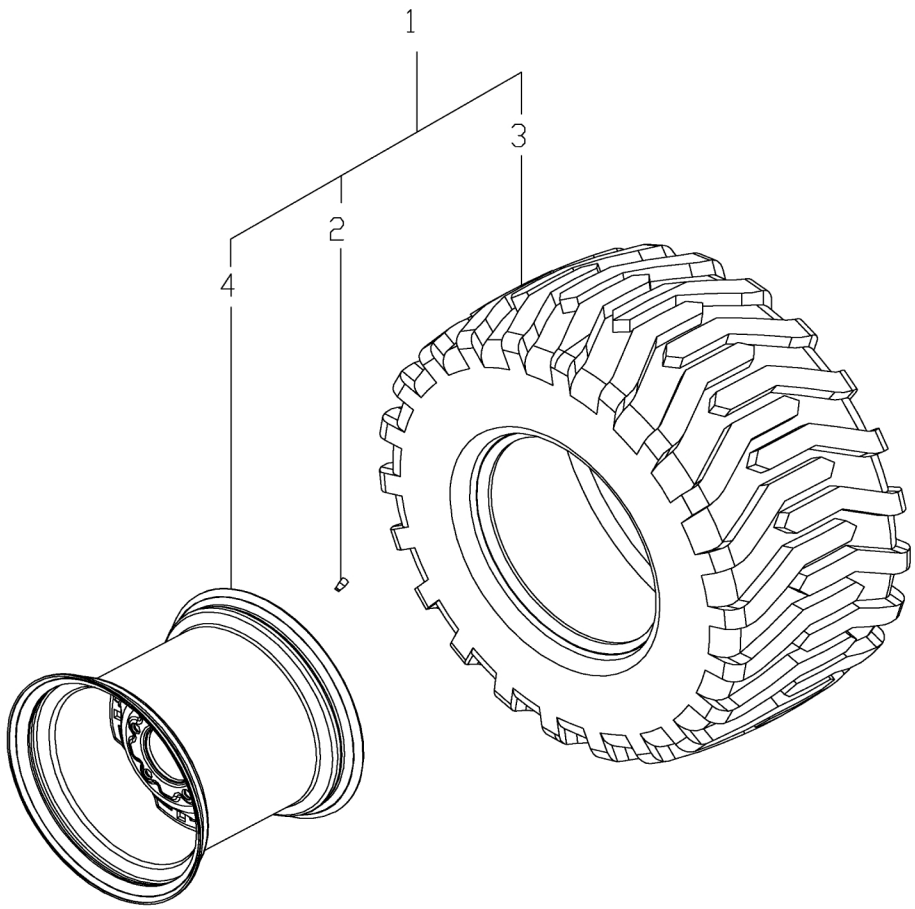

REF NO.	PART NUMBER	DESCRIPTION	QTY
1	N/A	R4 REAR TIRE KIT	2
2	CY-1A7880-14840	VALVE	2
3	CY-1A7880-34820	TIRE,26X12-12 R4	2
4	CY-1A7880-34830	WHEEL 12X10.5	2

Copyright 2007 Cub Cadet Yanmar LLC

FIG. 63. REAR HUB BOLT

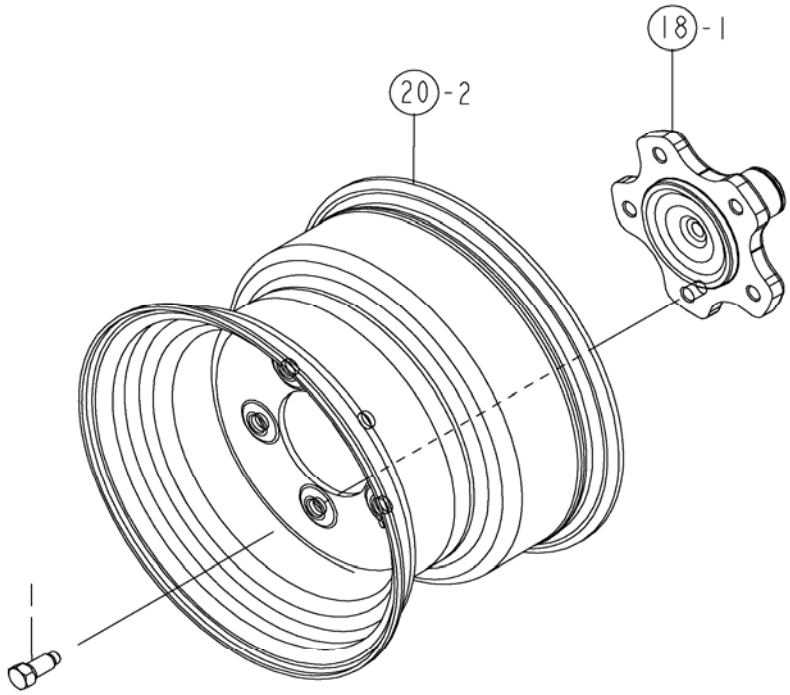

REF NO.	PART NUMBER	DESCRIPTION	QTY
1	CY-1A7880-34180	BOLT 7/16-20UNF	10

Copyright 2007 Cub Cadet Yanmar LLC

THIS PAGE INTENTIONALLY LEFT BLANK

Copyright 2007 Cub Cadet Yanmar LLC

FIG. 64. DISC BRAKE

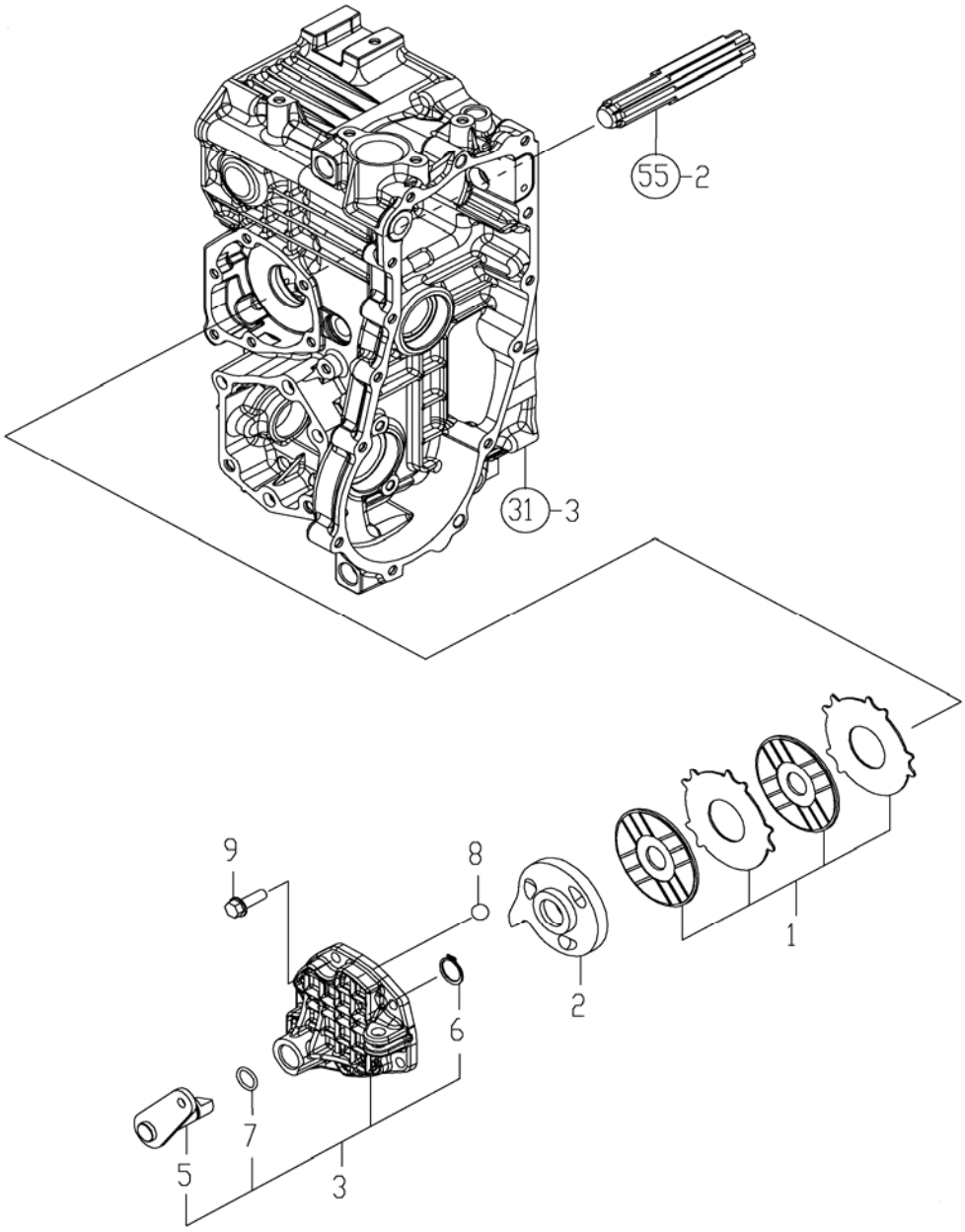

REF NO.	PART NUMBER	DESCRIPTION	QTY
1	CY-192157-36300	PLATE KIT, BRAKE	1
2	CY-1A7130-36330	ACTUATOR	1
3	CY-187K06-36340	CAM KIT, BRAKE	1
5	CY-187K06-36350	SHAFT ASSY, LEVER	1
6	CY-22242-000200	RING, 20	1
7	CY-24311-000160	PACKING, P 16.0	1
8	CY-24190-160001	BALL, 1/ 2	3
9	CY-26106-080252	BOLT, 8 X 25	6

Copyright 2007 Cub Cadet Yanmar LLC

FIG. 65. BRAKE PEDAL

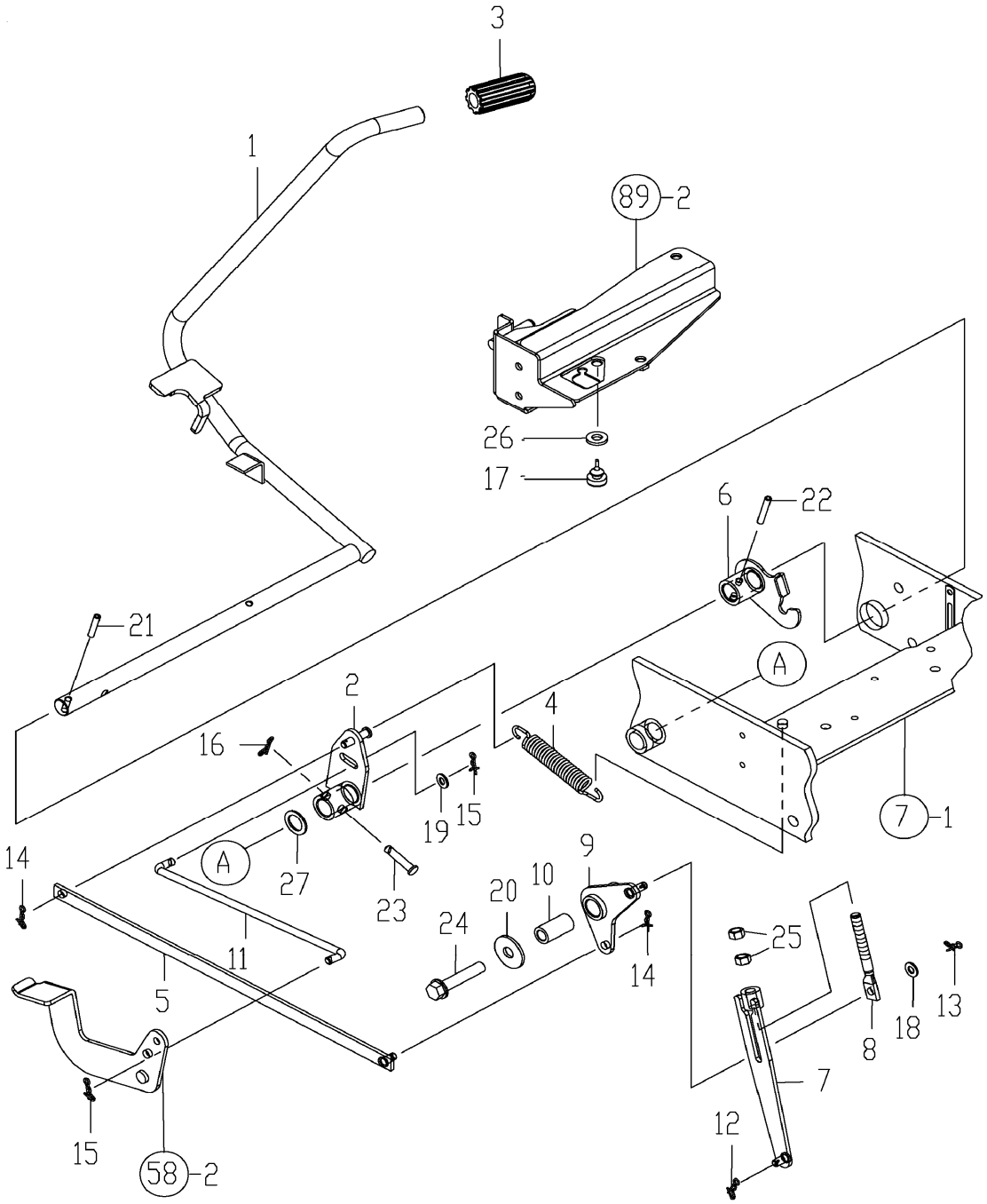

Copyright 2007 Cub Cadet Yanmar LLC

FIG. 65. BRAKE PEDAL

REF NO.	PART NUMBER	DESCRIPTION	QTY
1	CY-1A7880-37100	PEDAL CMP,BRAKE	1
2	CY-1A7880-37150	ARM CMP,BRAKE	1
3	CY-1A7880-37200	HEAD,BRAKE PEDAL	1
4	CY-1A7880-37220	SPRING, RETURN	1
5	CY-1A7880-37250	ROD CMP,BRAKE	1
6	CY-1A7880-37310	ARM,RELEASE CMP	1
7	CY-1A7880-37350	ROD CMP,PUSH	1
8	CY-1A7880-37390	SCREW,ADJUST	1
9	CY-1A7880-37400	ARM CMP,BRAKE REAR	1
10	CY-1A7880-37440	COLLAR	1
11	CY-1A7880-37450	LINK ROD,DIFF	1
12	CY-1C6281-52320	PIN, SNAP	1
13	CY-1C6281-52320	PIN, SNAP	1
14	CY-1C6281-52320	PIN, SNAP	2
15	CY-1C6281-52320	PIN, SNAP	2
16	CY-1C6281-52320	PIN, SNAP	1
17	CY-194330-62530	STOPPER,PEDAL	1
18	CY-22137-080000	WASHER, 8	1
19	CY-22137-080000	WASHER, 8	1
20	CY-22157-120000	WASHER, 12	1
21	CY-22351-060032	PIN, 6.0A X 32	1
22	CY-22351-060040	PIN, 6.0A X 40	1
23	CY-22487-080350	PIN, 8 X 35	1
24	CY-26106-120602	BOLT, 12 X 60	1
25	CY-26716-100002	NUT, 10	2
26	CY-194145-04814	WASHER, 10	1
27	CY-1A7510-36490	WASHER, 20 X 30 X 2 xxxxx & after	1

Copyright 2007 Cub Cadet Yanmar LLC

THIS PAGE INTENTIONALLY LEFT BLANK

Copyright 2007 Cub Cadet Yanmar LLC

FIG. 66. PARKING BRAKE

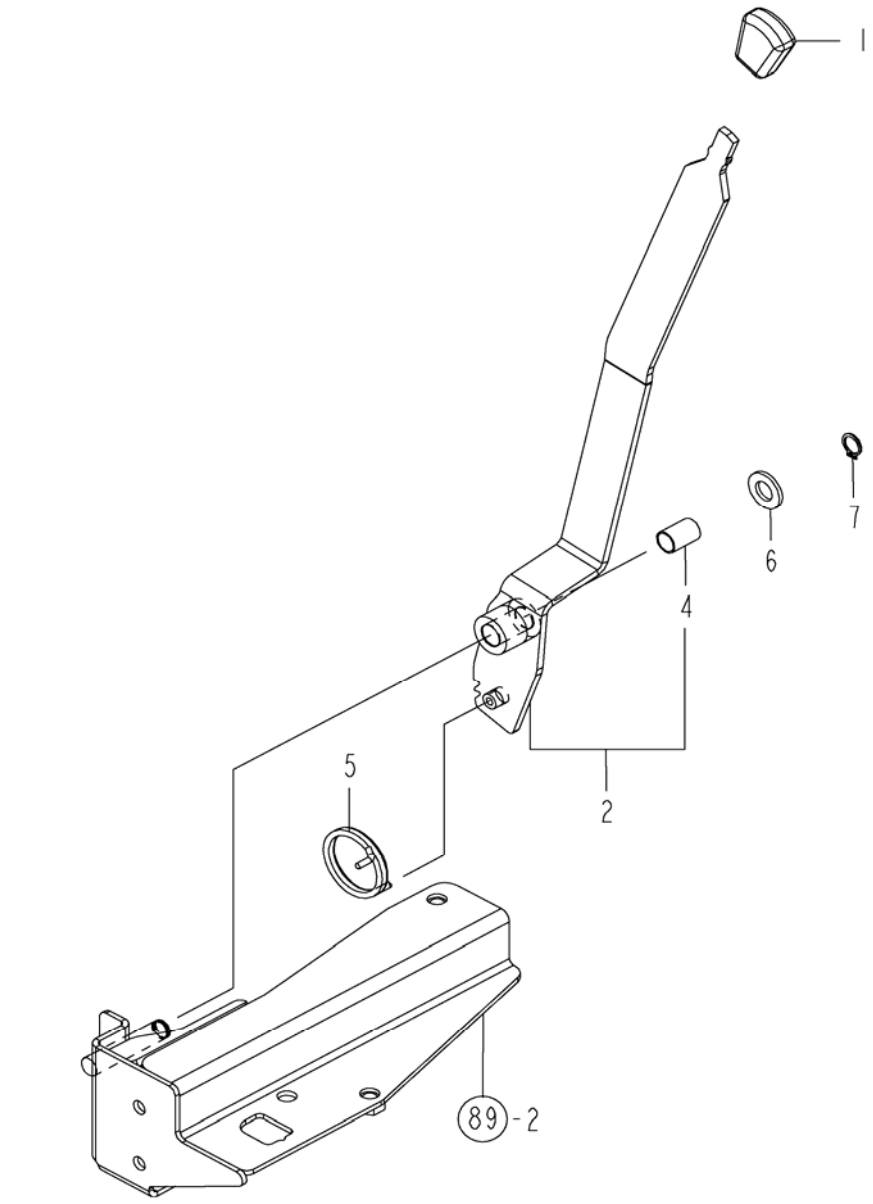

REF NO.	PART NUMBER	DESCRIPTION	QTY
1	CY-198273-28520	KNOB,	1
2	CY-1A7880-37490	LEVER ASY,PARKING	1
4	CY-24550-012200	BEARING, 12 X 20	1
5	CY-198475-37690	SPRING, LOCK	1
6	CY-22137-120000	WASHER, 12	1
7	CY-22242-000120	RING, 12	1

Copyright 2007 Cub Cadet Yanmar LLC

FIG. 67. LIFT CYLINDER

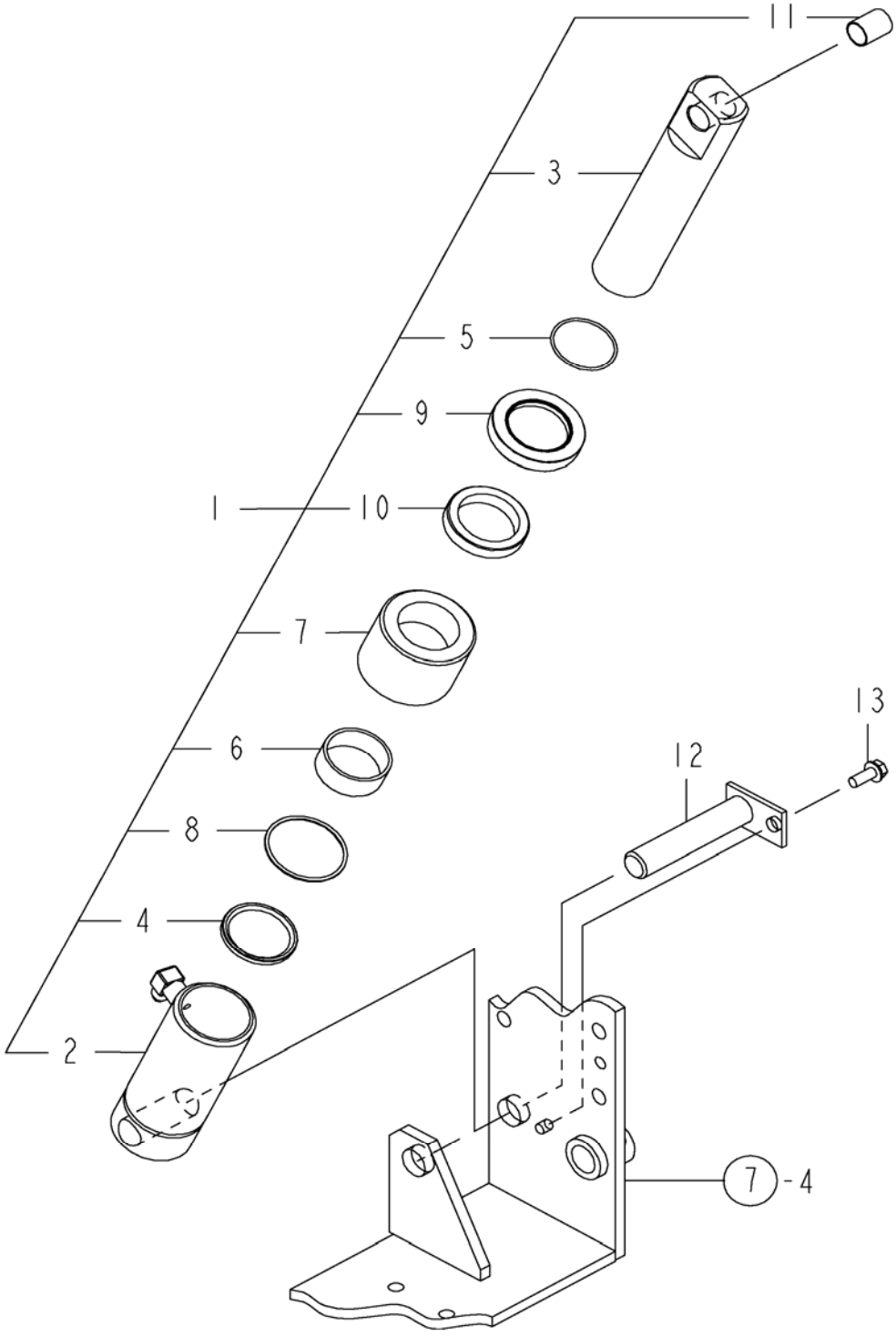

Copyright 2007 Cub Cadet Yanmar LLC

FIG. 67. LIFT CYLINDER

REF NO.	PART NUMBER	DESCRIPTION	QTY
1	CY-1A7880-43100	CYLINDER ASSY, HYD.	1
2	CY-1A7880-43200	TUBE CMP	1
3	(ORDER REF NO.1)	ROD	1
4	CY-1A7880-43350	SPACE	1
5	CY-1A7880-43370	STEEL RING	1
6	CY-1A7880-43390	DU BUSH	1
7	CY-1A7880-43400	HEAD COVER	1
8	CY-1A7880-43460	O-RING	1
9	CY-1A7880-43470	DUST SEAL	1
10	CY-1A7880-43480	ROD SEAL	1
11	CY-24550-018250	BEARING, 18 X 25	1
12	CY-1A7880-44740	PIN CMP (CYLINDER	1
13	CY-26106-080202	BOLT, 8 X 20	1

Copyright 2007 Cub Cadet Yanmar LLC

THIS PAGE INTENTIONALLY LEFT BLANK

Copyright 2007 Cub Cadet Yanmar LLC

FIG. 68. LIFT ARM

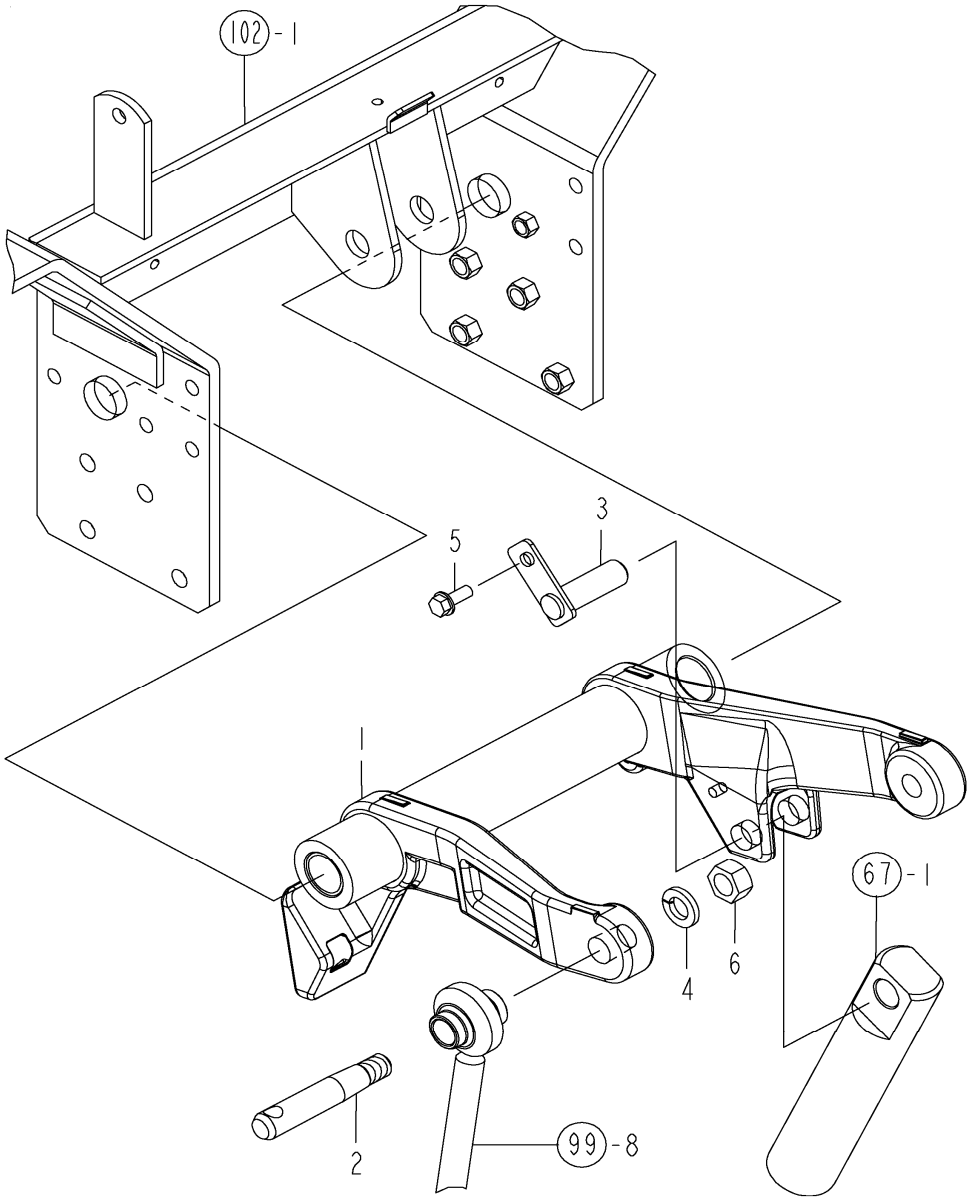

REF NO.	PART NUMBER	DESCRIPTION	QTY
1	CY-1A7880-44400	LIFTARM KIT	1
2	CY-194130-44480	PIN, LIFT ARM	2
3	CY-1A7880-44700	PIN CMP (LIFT ARM)	1
4	CY-22217-160000	WASHER, 16	2
5	CY-26106-100252	BOLT, 10 X 25	1
6	CY-26736-160002	NUT, 16	2

Copyright 2007 Cub Cadet Yanmar LLC

FIG. 69. CONTROL VALVE

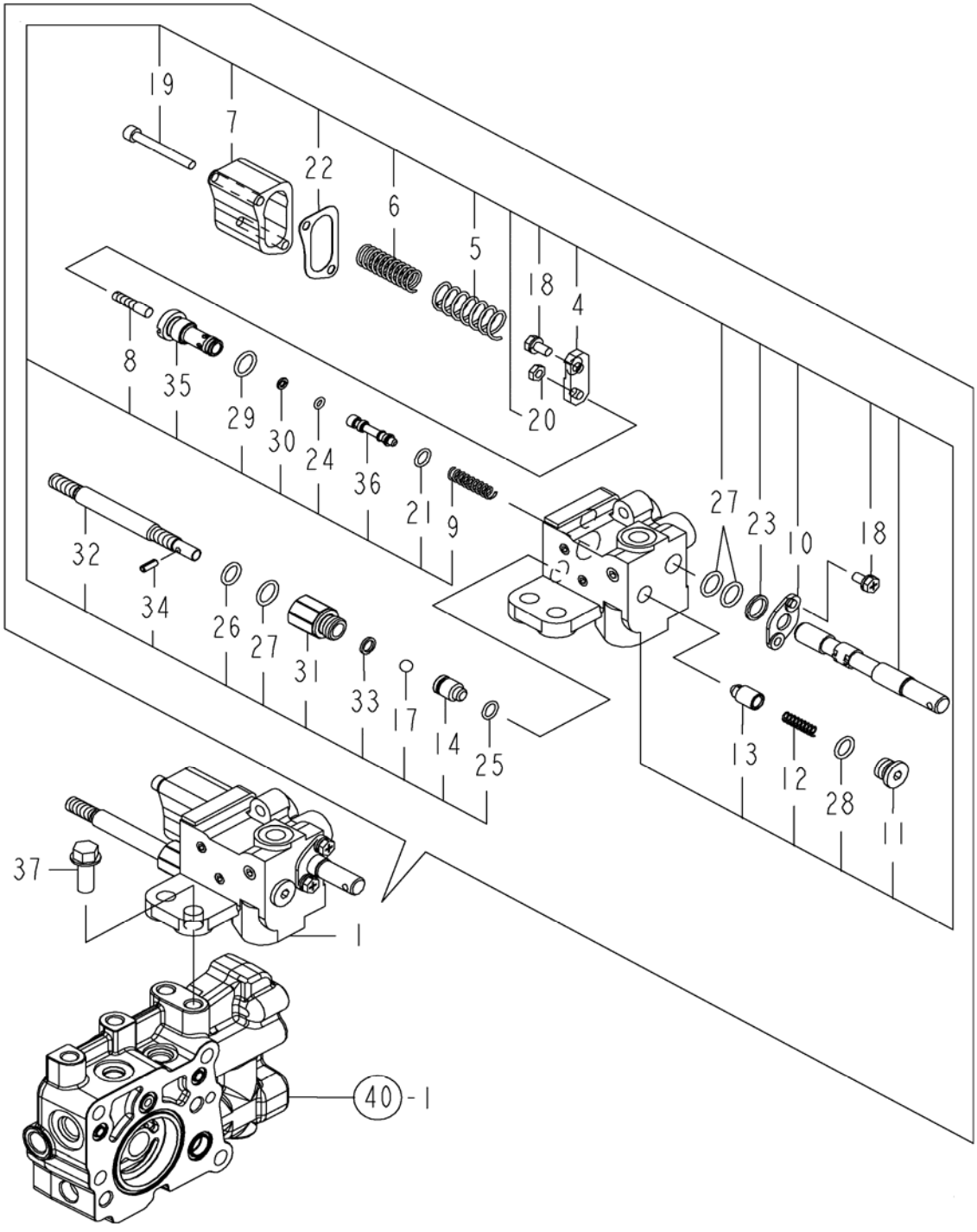

Copyright 2007 Cub Cadet Yanmar LLC

FIG. 69. CONTROL VALVE

REF NO.	PART NUMBER	DESCRIPTION	QTY
1	CY-1A7880-45100	VALVE ASSY, LIFT	1
4	CY-1A7880-45520	PLATE,LIFT VALVE	1
5	CY-1A7880-45530	SPLING,LIFT VALVE	1
6	CY-1A7880-45540	SPLING,LIFT VALVE	1
7	CY-1A7880-45560	COVER,LIFT VALVE	1
8	CY-1A7880-45580	PUSH ROD,LIFT VALVE	1
9	CY-1A7880-45610	SPRING,MECHA,VALVE	1
10	CY-1A7880-45620	PLATE,LIFT VALVE	1
11	CY-1A7880-45640	PLUG,LIFT VALVE	1
12	CY-1A7880-45650	SPRING,LIFT VALVE	1
13	CY-1A7880-45660	POPPET,CHECK,VALVE	1
14	CY-1A7880-45700	PLUNGER,LIFT VALVE	1
17	CY-24190-100003	BALL, 5/16	1
18	CY-26013-060129	BOLT, 6 X 12	3
19	CY-26450-060502	BOLT, 6 X 50	2
20	CY-26756-060002	NUT, 6	1
21	N/A	ORING,LIFT VALVE	1
22	N/A	PACKING,LIFT VALVE	1
23	N/A	DUST SEAL,LIFT VALVE	1
24	CY-24311-000050	PACKING, P 5.0	1
25	CY-24311-000100	PACKING, P 10.0	1
26	CY-24311-000120	PACKING, P 12.0	1
27	CY-24311-000140	PACKING, P 14.0	3
28	CY-24315-000120	PACKING, P 12.0	1
29	CY-24315-000140	PACKING, P 14.0	1
30	CY-24372-000050	RING,BACKUP T2 P 5	1
31	N/A	GUIDE,LIFT VALVE	1
32	N/A	SHAFT,LIFT VALVE	1
33	N/A	WASHER,LIFT VALVE	1
34	CY-22351-040012	PIN, 4.0A X 12	1
35	N/A	SLEEVE,MECHA,VALVE	1
36	N/A	SPOOL,MECHA,VALVE	1
37	CY-26106-100252	BOLT, 10 X 25	2
50	CY-1A7880-45800	SEAL KIT,LIFT VALVE (INCL. REF NO.17-26)	1
51	CY-1A7880-45830	STOP BOLT KIT,VALVE (INCL. REF NO.22, 23, 27-30)	1
52	CY-1A7880-45850	MECHAVALVE KIT,VALVE (INCL. REF NO.20, 25, 26, 31-33)	1

Copyright 2007 Cub Cadet Yanmar LLC

FIG. 70. STOP VALVE

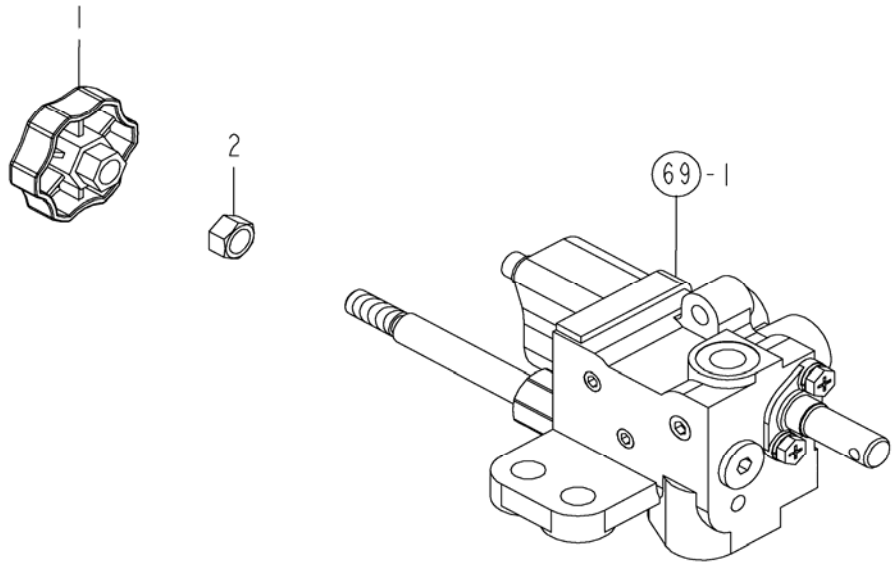

REF NO.	PART NUMBER	DESCRIPTION	QTY
1	CY-1A8160-46670	KNOB,STOP VALVE	1
2	CY-26716-100002	NUT, 10	1

Copyright 2007 Cub Cadet Yanmar LLC

FIG. 71. VALVE, SCV

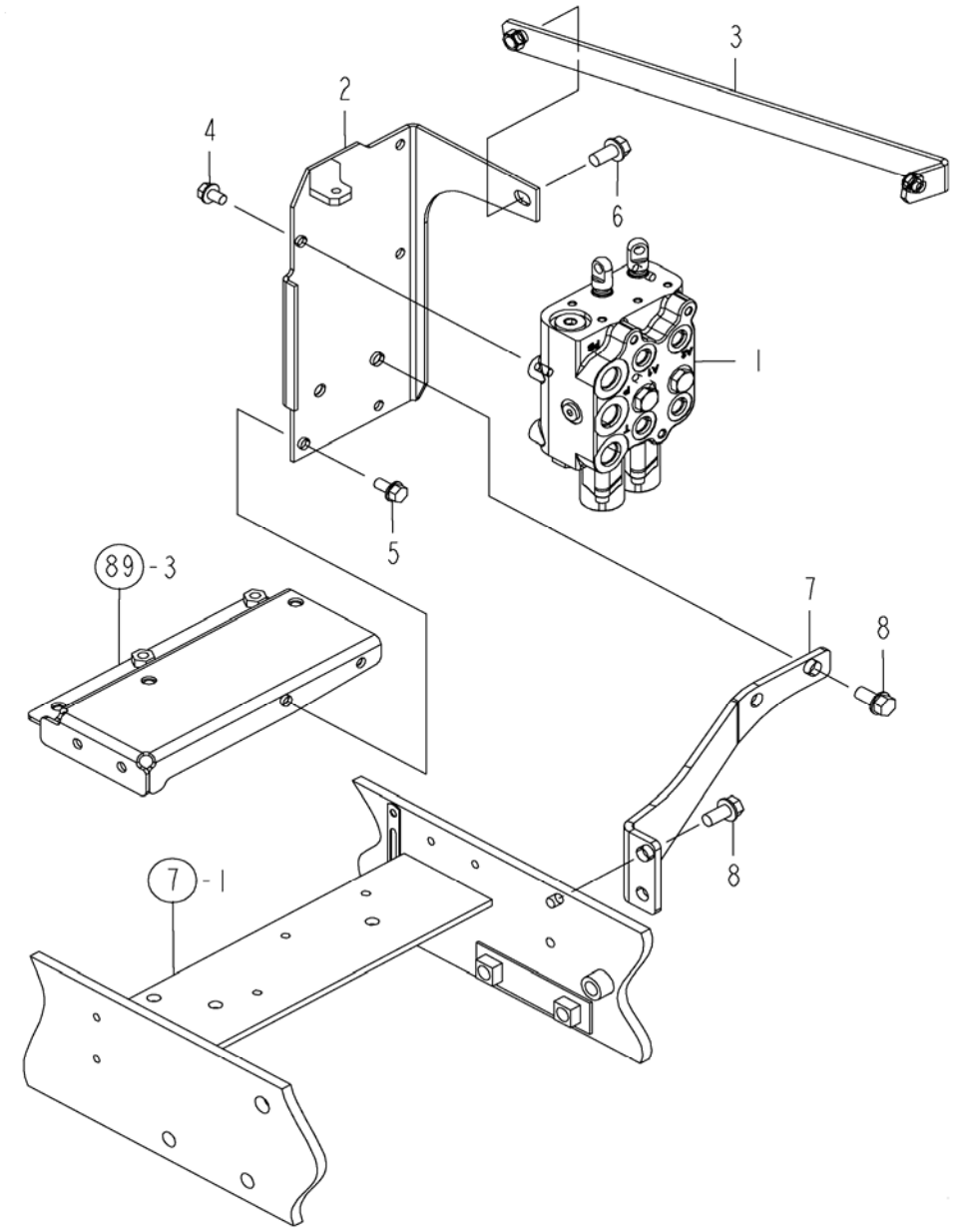

REF NO.	PART NUMBER	DESCRIPTION	QTY
1	CY-1A7880-47100	VALVE CMP,LORDER	1
2	CY-1A7880-47120	STAY,SCV VALVE	1
3	CY-1A7880-47770	PLATE CMP,SCV VALVE	1
4	CY-26106-080122	BOLT, 8 X 12	3
5	CY-26106-080162	BOLT, 8 X 16	2
6	CY-26106-100202	BOLT, 10 X 20	2
7	CY-1A7880-47850	PLATE,SUPPORT SCV	1
8	CY-26106-100202	BOLT, 10 X 20	4

Copyright 2007 Cub Cadet Yanmar LLC

FIG. 72. LEVER, SCV

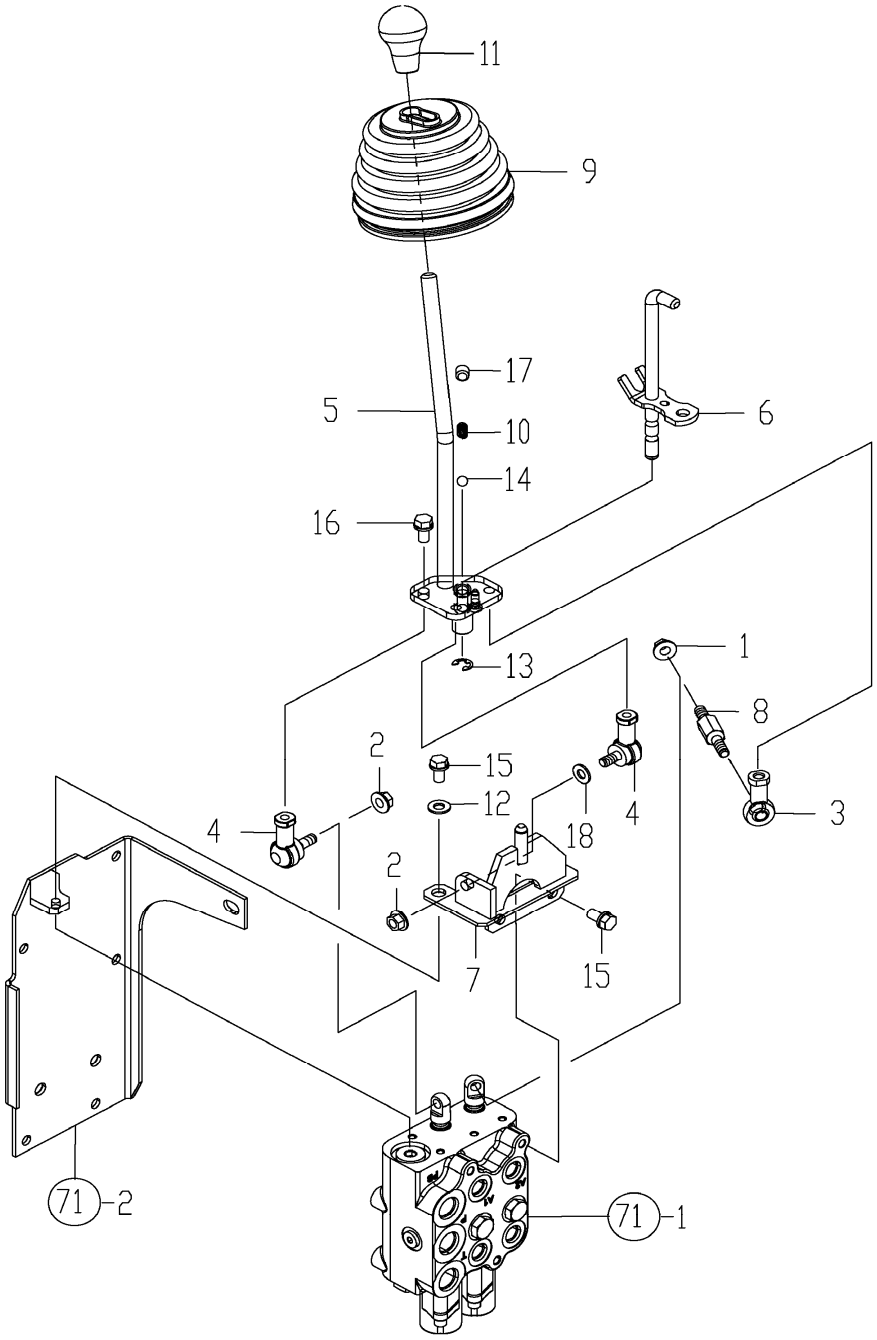

Copyright 2007 Cub Cadet Yanmar LLC

FIG. 72. LEVER, SCV

REF NO.	PART NUMBER	DESCRIPTION	QTY
1	CY-194990-22140	NUT, M8	1
2	CY-194990-22140	NUT, M8	2
3	CY-198164-27970	END, ROD 8R	1
4	CY-172122-46590	ELBOW, 8	2
5	CY-1A7880-47600	LEVER CMP,SCV	1
6	CY-1A7880-47650	PIN CMP,LOCK	1
7	CY-1A7880-47700	BKT CMP,SCV LEVER	1
8	CY-1A7880-47750	BOLT,SCV LEVER	1
9	CY-1A7880-47950	BOOTS,SCV LEVER	1
10	CY-1E6150-56040	SPRING, FORK	1
11	CY-194990-85561	KNOB	1
12	CY-22137-080000	WASHER, 8	1
13	CY-22272-000080	RING, 8	1
14	CY-24190-100003	BALL, 5/16	1
15	CY-26013-080162	BOLT, 8 X 16	3
16	CY-26013-080162	BOLT, 8 X 16	3
17	CY-26911-100102	SCREW, 10 X 10	1
18	CY-22137-080000	WASHER, 8	1

Copyright 2007 Cub Cadet Yanmar LLC

FIG. 73. HYDRAULIC CONTROL

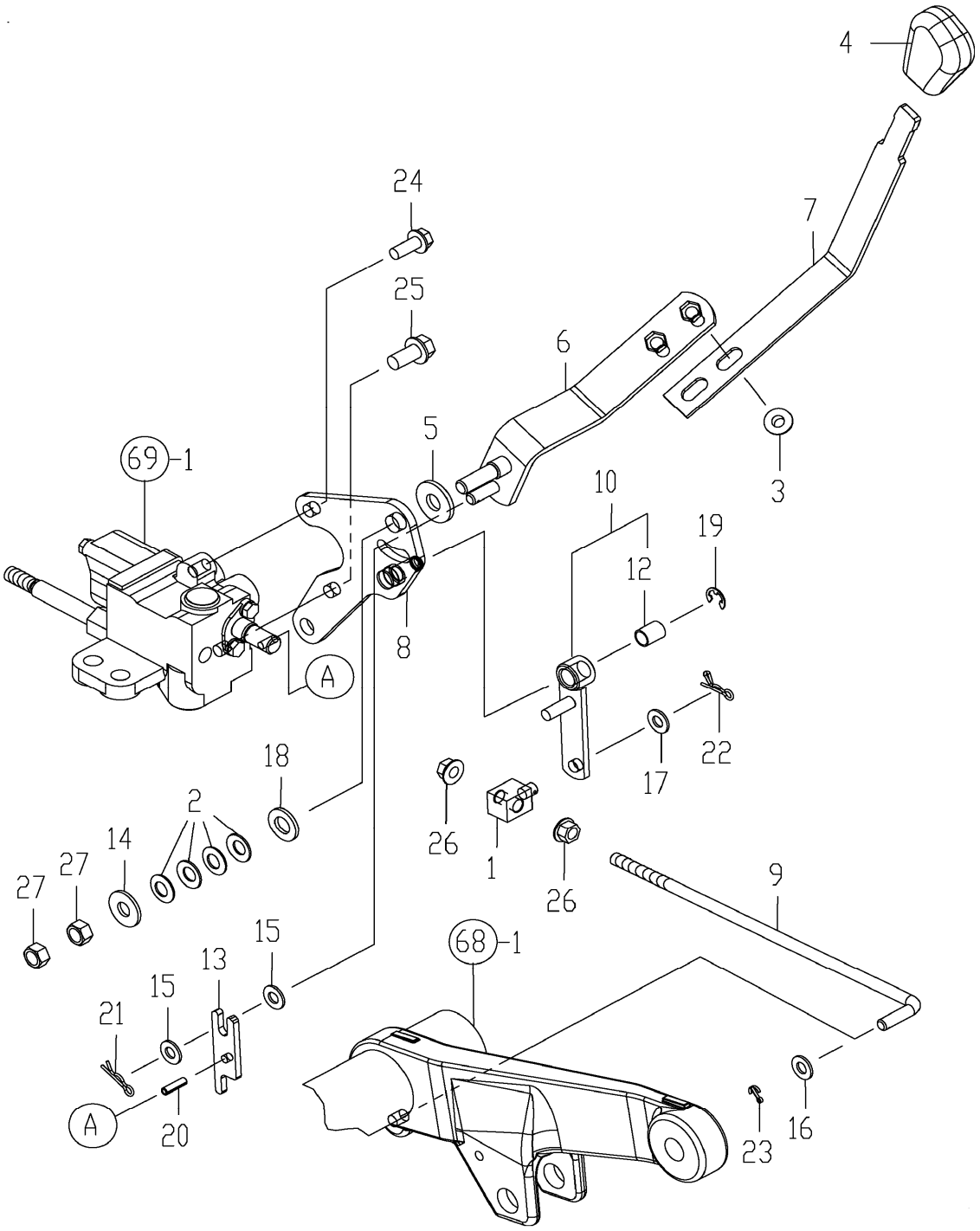

Copyright 2007 Cub Cadet Yanmar LLC

FIG. 73. HYDRAULIC CONTROL

REF NO.	PART NUMBER	DESCRIPTION	QTY
1	CY-194208-47530	ADJUSTER	1
2	CY-194740-00160	WASHER,CONICAL 10	4
3	CY-194990-22140	NUT, M8	2
4	CY-198200-47810	KNOB, BLACK	1
5	CY-1A6260-41250	PLATE, FRICTION	1
6	CY-1A7880-45000	LEVER CMP,POSITION	1
7	CY-1A7880-45040	LEVER,POSITION	1
8	CY-1A7880-45210	STAY CMP,HYD. LINK	1
9	CY-1A7880-45250	ROD,FEEDBACK	1
10	CY-1A7880-45330	LEVER ASY,CONTROL	1
12	CY-24550-010150	BEARING, 10 X 15	1
13	CY-1A7070-47400	LEVER, SPOOL	1
14	CY-194145-61570	WASHER, 10	1
15	CY-22137-080000	WASHER, 8	2
16	CY-22137-080000	WASHER, 8	1
17	CY-22137-080000	WASHER, 8	1
18	CY-22137-120000	WASHER, 12	1
19	CY-22272-000080	RING, 8	1
20	CY-22351-050018	PIN, 5.0A X 18	1
21	CY-22372-080000	PIN, 8	1
22	CY-1C6281-52320	PIN, SNAP	1
23	CY-22417-200160	PIN, 2.0 X 16	1
24	CY-26106-080202	BOLT, 8 X 20	2
25	CY-26106-100202	BOLT, 10 X 20	1
26	CY-26366-080002	NUT, 8	2
27	CY-26716-100002	NUT, 10	1

Copyright 2007 Cub Cadet Yanmar LLC

FIG. 74. HYDRAULIC PIPE

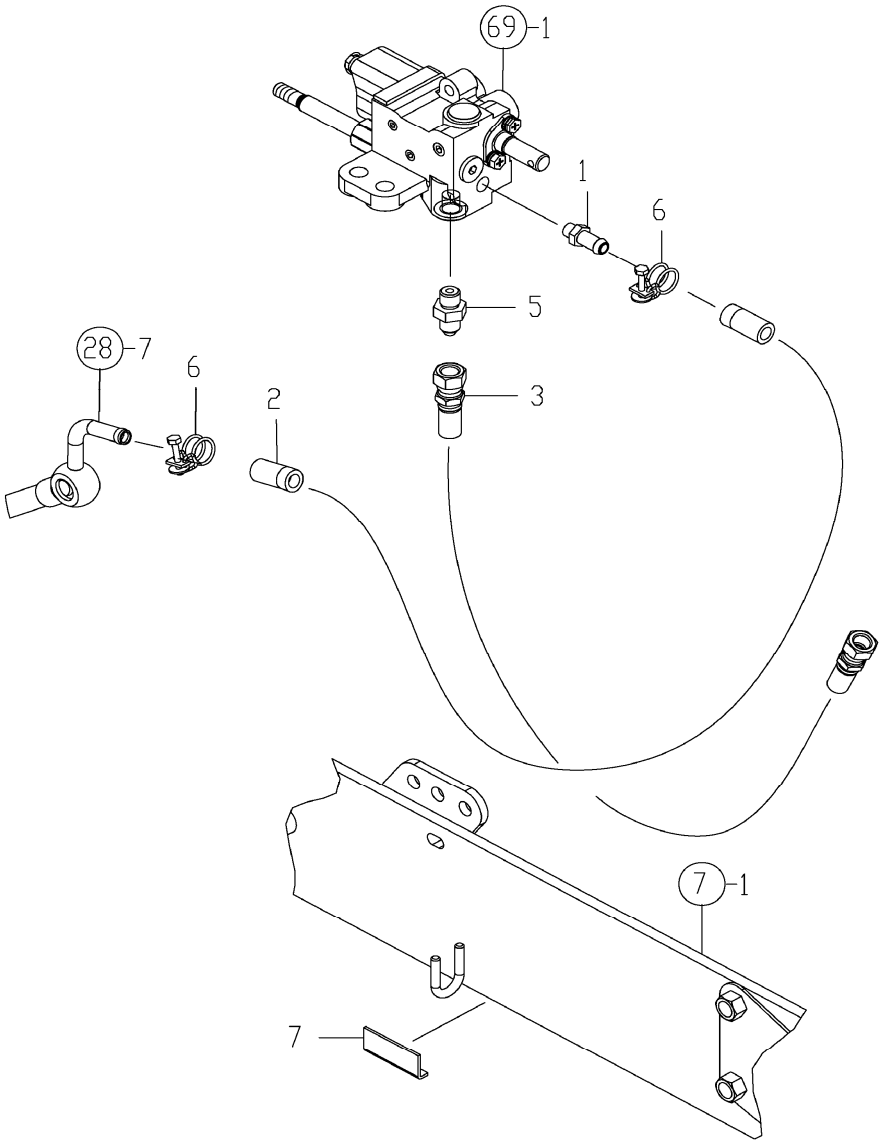

REF NO.	PART NUMBER	DESCRIPTION	QTY
1	CY-1A6380-25370	JOINT, R1/8	1
2	CY-1A7880-48100	LP HOSE,DRAIN	1
3	CY-1A7880-48160	HP HOSE,CLYNDER	1
4	CY-194440-51620	CLAMP, B	1
5	CY-1E8450-66390	CONNECTOR PF1/4	1
6	CY-23010-018000	CLAMP, HOSE 19	2
7	CY-198093-84810	SEAL, FENDER	1

Copyright 2007 Cub Cadet Yanmar LLC

FIG. 75. OIL COOLER

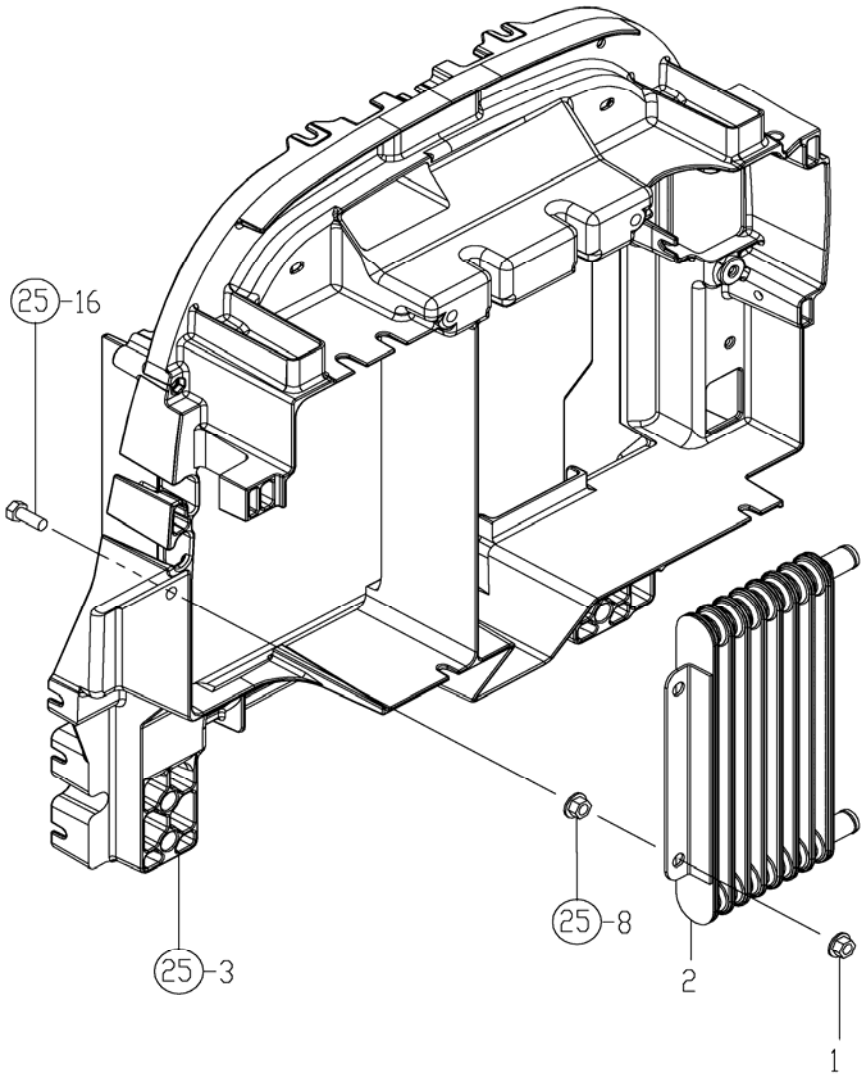

REF NO.	PART NUMBER	DESCRIPTION	QTY
1	CY-194990-22140	NUT, M8	2
2	CY-1E8600-66700	COOLER, OIL	1

Copyright 2007 Cub Cadet Yanmar LLC

FIG. 76. PIPING, SCV

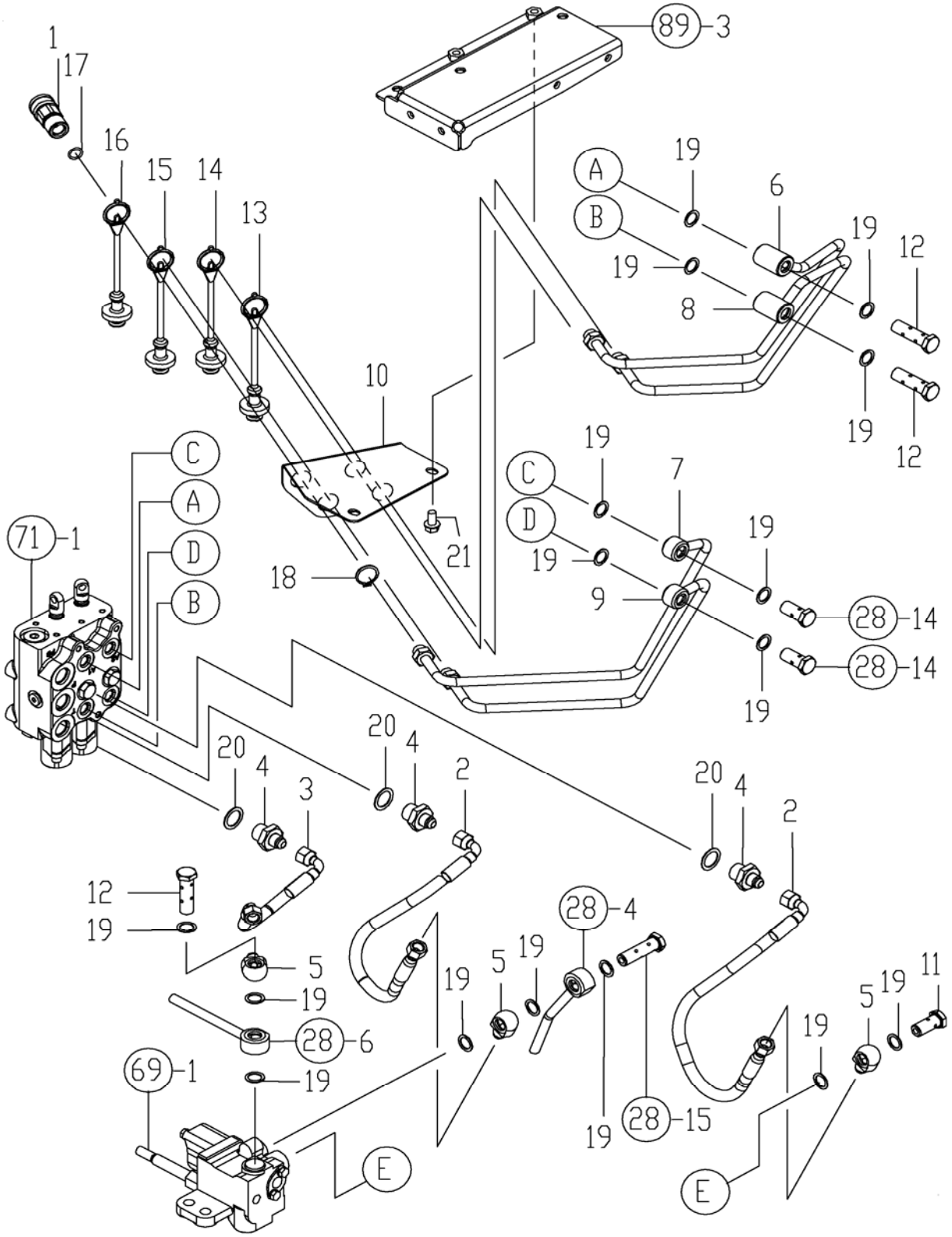

Copyright 2007 Cub Cadet Yanmar LLC

FIG. 76. PIPING, SCV

REF NO.	PART NUMBER	DESCRIPTION	QTY
1	CY-198223-46250	COUPLER, HYD.QUICK	4
2	CY-1A7880-47150	LP HOSE,SCV	2
3	CY-1A7880-47200	LP HOSE,SCV	1
4	CY-1A7880-47520	JOINT3/4UNF-9/16UNF	3
5	CY-1A7880-47540	JOINT9/16UNF-14.5	3
6	CY-1A7880-47300	HP PIPE CMP,SCV A1	1
7	CY-1A7880-47350	HP PIPE CMP,SCV A2	1
8	CY-1A7880-47400	HP PIPE CMP,SCV B1	1
9	CY-1A7880-47450	HP PIPE CMP,SCV B2	1
10	CY-1A7880-47500	STAY(SCV COUPLER	1
11	CY-1A7880-47510	BALL JOINT BOLT 9/16	1
12	CY-1A7880-47530	BALL JOINT BT L 9/16	3
13	CY-1A7880-47550	PLUG,DUST RED	1
14	CY-1A7880-47560	PLUG,DUST BLUE	1
15	CY-1A7880-47570	PLUG,DUST YELLOW	1
16	CY-1A7880-47580	PLUG,DUST GREEN	1
17	CY-194850-49290	O-RING, 6-1	4
18	CY-22242-000220	RING, 22	4
19	CY-23414-140000	GASKET, 14 X 1.0	16
20	CY-23414-190000	GASKET, 19 X 1.0	3
21	CY-26106-080162	BOLT, 8 X 16	2

Copyright 2007 Cub Cadet Yanmar LLC

FIG. 77. WIRE HARNESS

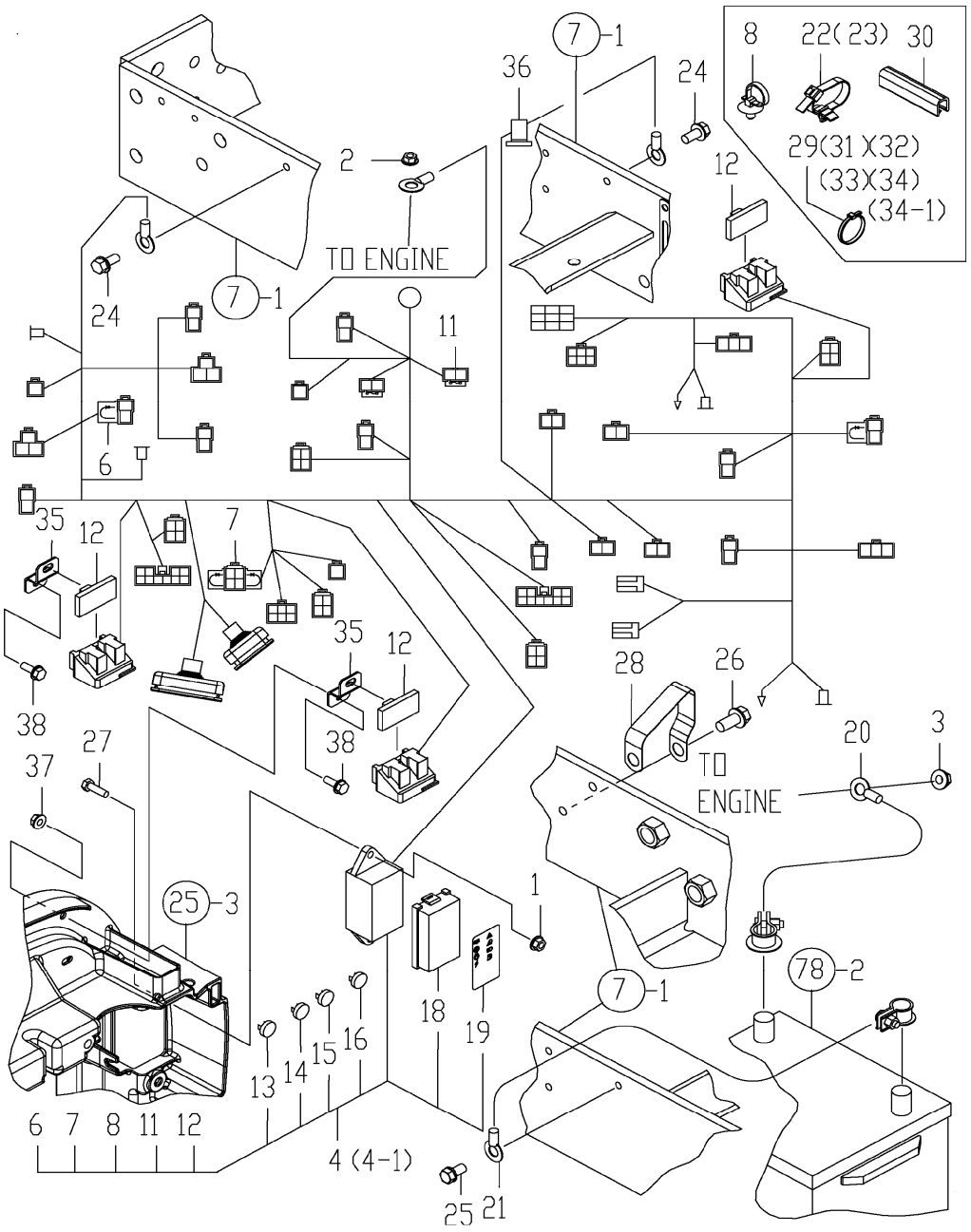

Copyright 2007 Cub Cadet Yanmar LLC

FIG. 77. WIRE HARNESS

REF NO.	PART NUMBER	DESCRIPTION	QTY
1	CY-194990-22130	NUT, M6	2
2	CY-194990-22130	NUT, M6	1
3	CY-194990-22140	NUT, M8	1
4	CY-1A7880-51101	HARNESS ASSY, WIRE xxxxx & before	1
4-1	CY-1A7880-51102	HARNESS ASSY, WIRE xxxxx & after	1
6	CY-1A7500-51130	DIODE, 3.0A	3
7	CY-1A8160-51130	DIODE, 3.0AX2	3
8	CY-1A7500-51160	CLIP, HARNESS	26
11	CY-1A6240-51630	BLOW, SLOW FUSE 60A	2
12	CY-1A7880-51730	CLIP	3
13	CY-198535-52110	FUSE, 5A	4
14	CY-198535-52120	FUSE, 10A	3
15	CY-198535-52130	FUSE, 15A	3
16	CY-1A7450-52180	FUSE, 25A	2
18	CY-1A7531-52420	COVER, FUSE BOX	1
19	CY-1A7880-65780	LABEL, FUSE	1
20	CY-1A6780-51410	CABLE, BATTERY POS.	1
21	CY-1A7880-51420	CABLE, BATTERY NEG.	1
22	CY-194680-51670	CLAMP	1
23	CY-194680-51670	CLAMP	1
24	CY-26106-080162	BOLT, 8 X 16	2
25	CY-26106-080162	BOLT, 8 X 16	1
26	CY-26106-100202	BOLT, 10 X 20	1
27	CY-26116-060202	BOLT, 6 X 20	2
28	CY-933171-15801	WIRE, ENGINE GROUND	1
29	CY-1A1380-55310	CLAMP, WIRE	2
30	CY-1A7880-10410	TRIM If equipped	1
31	CY-29622-140001	BAND, 140 If equipped	1
32	CY-29622-250001	BAND, 250 If equipped	1
33	CY-29622-250001	BAND, 250 If equipped	1
34	CY-29622-250001	BAND, 250 xxxxxx & before	1
34-1	CY-29622-140001	BAND, 140	1
35	CY-1A7880-51800	STAY, RELAY If equipped	2
36	CY-194680-78350	STICKER, CABLE 18	1
37	CY-194990-22130	NUT, M6 If equipped	2
38	CY-26106-060162	BOLT, 6 X 16 If equipped	2

Copyright 2007 Cub Cadet Yanmar LLC

THIS PAGE INTENTIONALLY LEFT BLANK

Copyright 2007 Cub Cadet Yanmar LLC

FIG. 78. BATTERY

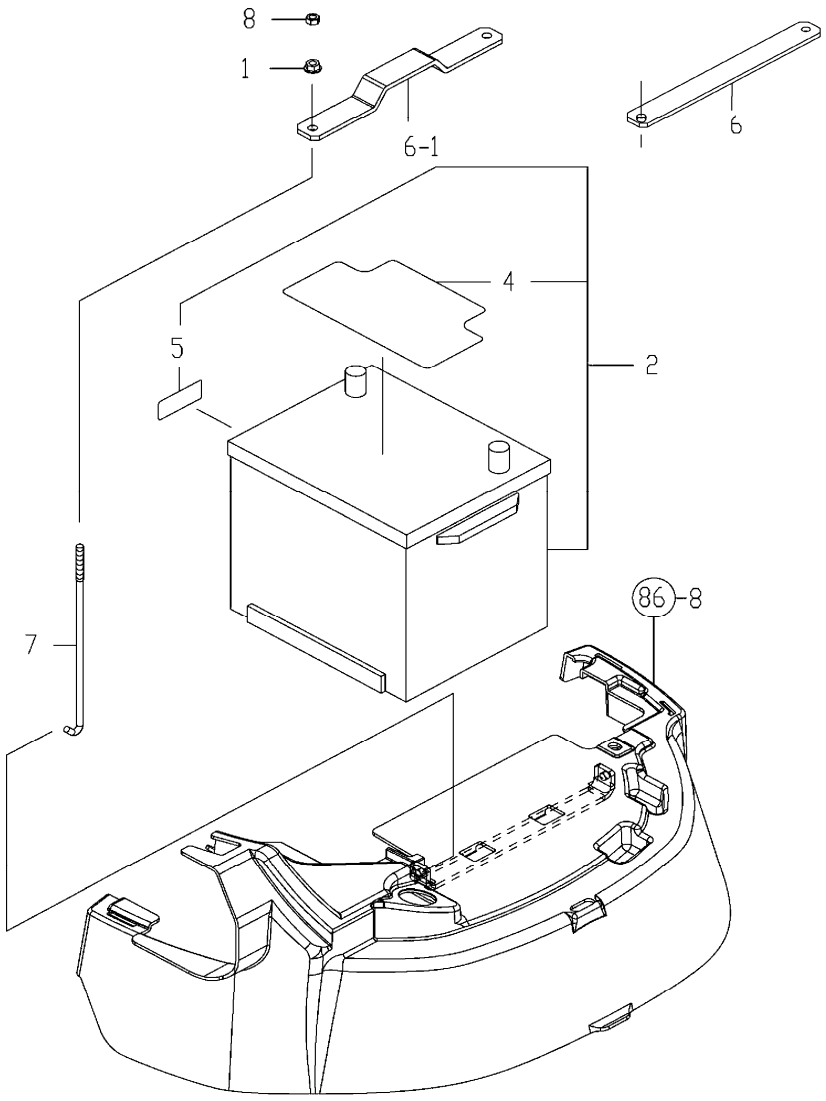

REF NO.	PART NUMBER	DESCRIPTION	QTY
1	CY-194990-22130	NUT, M6	2
2	925-04514	BATTERY, 26R, ASSY use w/ref # 6-1	1
2	CY-1A8160-51500	BATTERY, 26R, ASSY	1
4	N/A	LABEL, BATTERY	1
5	N/A	LABEL, CA, 65, WARN	1
6	CY-1A7880-58110	CLAMP, BATTERY only for CY-1A8160-51500	1
6-1	CY-1A7880-58111	CLAMP, BATTERY	1
7	CY-1A7880-58120	ROD, BATTERY CLAMP	2
8	CY-26716-060002	NUT, 6	2

Copyright 2007 Cub Cadet Yanmar LLC

FIG. 79. SWITCHES

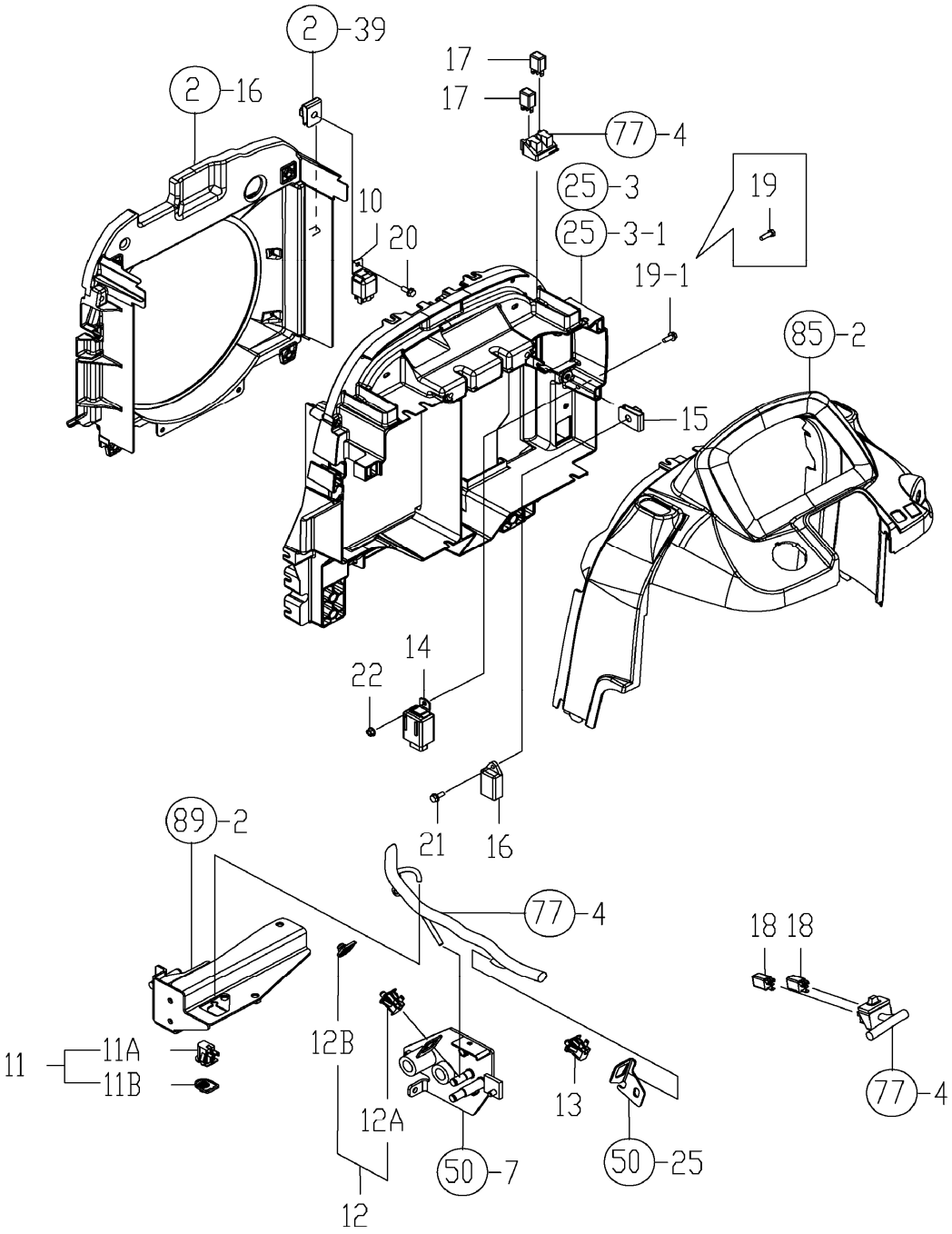

Copyright 2007 Cub Cadet Yanmar LLC

FIG. 79. SWITCHES

REF NO.	PART NUMBER	DESCRIPTION	QTY
10	CY-198220-52180	RELAY, STARTER	1
11	N/A	SWITCH NC ASSEMBLY PEDAL	1
11A	CY-1A7880-52210	SWITCH NC, PEDAL	1
11B	CY-1A8160-52330	PROTECTIVE COVER	1
12	N/A	SWITCH NC ASSEMBLY PEDAL	1
12A	CY-1A7880-52210	SWITCH NC, PEDAL	1
12B	CY-1A8160-52330	PROTECTIVE COVER	1
13	CY-1A8160-52310	SWITCH, SEAT DELTA AS	1
14	CY-1A6780-57200	UNIT, FLUSHER	1
15	CY-198071-61890	NUT, M6	1
16	CY-129211-77920	TIMER, SECTION 1	1
17	CY-1K1140-82500	RELAY, ACM 13211M01	4
18	CY-1K1140-82500	RELAY, ACM 13211M01	2
19	CY-26116-060202	BOLT, 6 X 20 xxxxxx & before	1
19-1	CY-26106-060162	BOLT, 6 X 16 xxxxxx & after	1
20	CY-26106-060162	BOLT, 6 X 16	1
21	CY-26106-060162	BOLT, 6 X 16	1
22	CY-494990-22130	NUT, M6	1

Copyright 2007 Cub Cadet Yanmar LLC

THIS PAGE INTENTIONALLY LEFT BLANK

Copyright 2007 Cub Cadet Yanmar LLC

FIG. 80. SEAT SWITCH

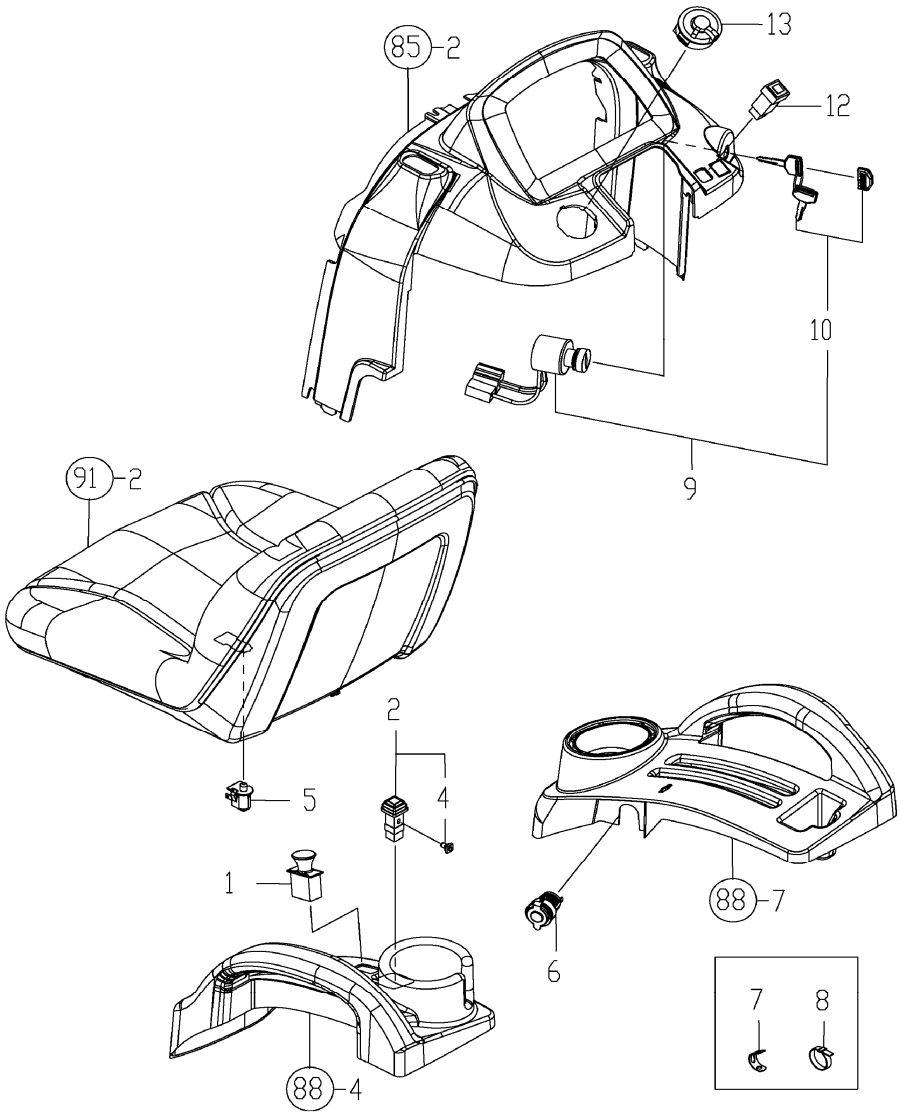

REF NO.	PART NUMBER	DESCRIPTION	QTY
1	CY-172531-17300	PTO,SWITCH	1
2	CY-1A7880-52250	SWITCH NL (Y)	1
4	CY-198133-78840	LAMP ASSY,	1
5	CY-1A8160-52310	SWITCH, SEAT, DELTA, AS	1
6	CY-1A7880-57100	DC POWER OUTLET	1
7	CY-194440-51630	CLAMP, WIRING	1
8	CY-29622-140001	BAND, 140	2
9	CY-1A7880-52100	SWITCH, ASSY STARTER	1
10	CY-198226-52100	KEY ASSY	1
12	CY-1A7335-52120	HAZARD SW	1
13	CY-1A7880-52140	SWITCH, COMBINATION	1

Copyright 2007 Cub Cadet Yanmar LLC

FIG. 81. LAMPS

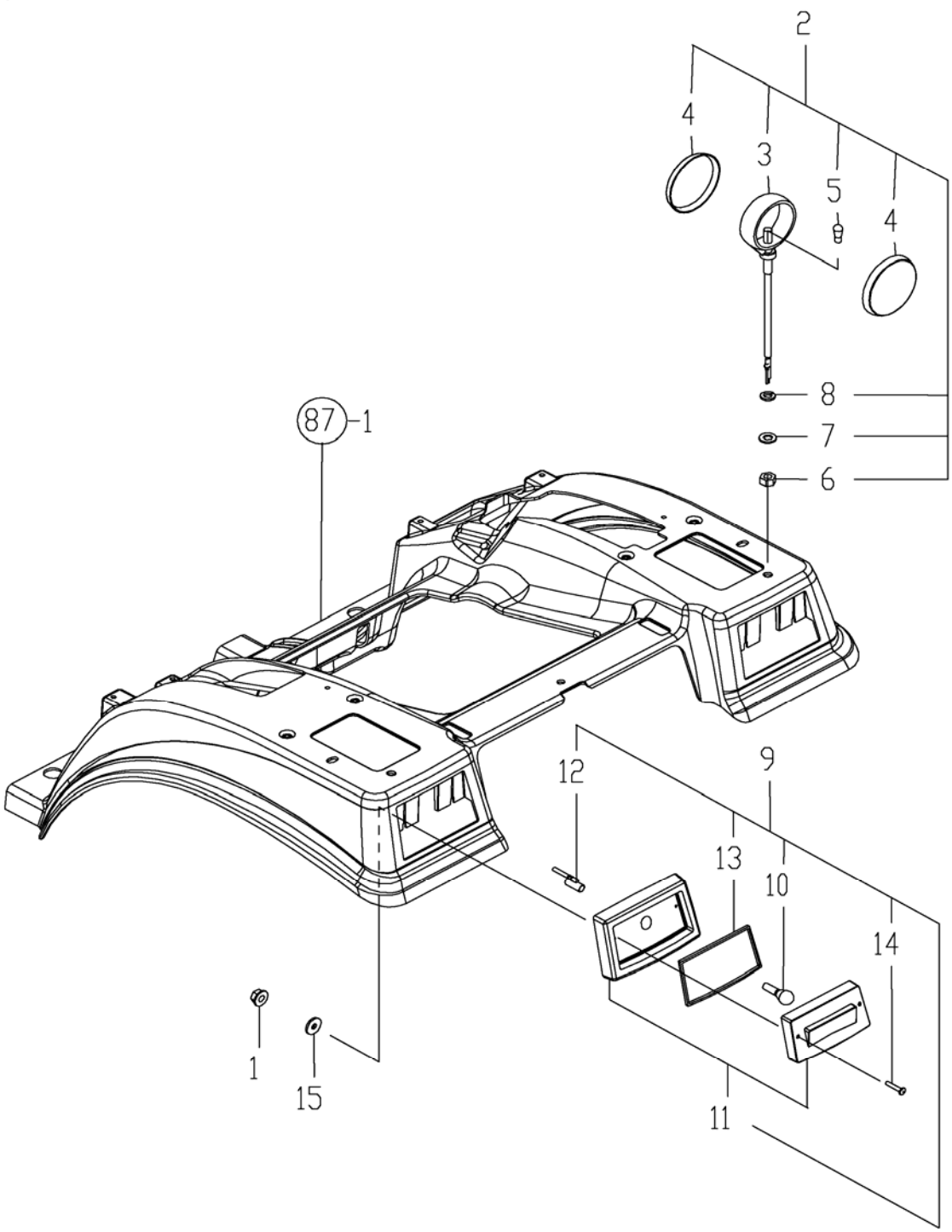

Copyright 2007 Cub Cadet Yanmar LLC

FIG. 81. LAMPS

REF NO.	PART NUMBER	DESCRIPTION	QTY
1	CY-194990-22130	NUT, M6	4
2	CY-1A7880-53400	LAMP ASSY,FLASHER	2
3	(ORDER REF NO.2)	HOUSING	2
4	CY-1A7880-53420	LENS	4
5	CY-1A7880-53430	BULB	2
6	CY-21731-040002	NUT, 1/2	2
7	CY-22137-130000	WASHER, 13	2
8	CY-22217-130000	WASHER, 13	2
9	CY-1A7335-53600	LAMP,TAIL	2
10	CY-1A7335-53610	BULB 12V-21/5W	2
11	CY-1A7335-53620	LENS ASSY	2
12	CY-1A7335-53630	HOUSING SEMI ASSY	2
13	CY-1A7335-53640	GASKET	2
14	CY-1A7335-53650	SCREW,M6X32	4
15	CY-22157-060000	WASHER, 6	4

Copyright 2007 Cub Cadet Yanmar LLC

FIG. 82. FRONT LAMPS

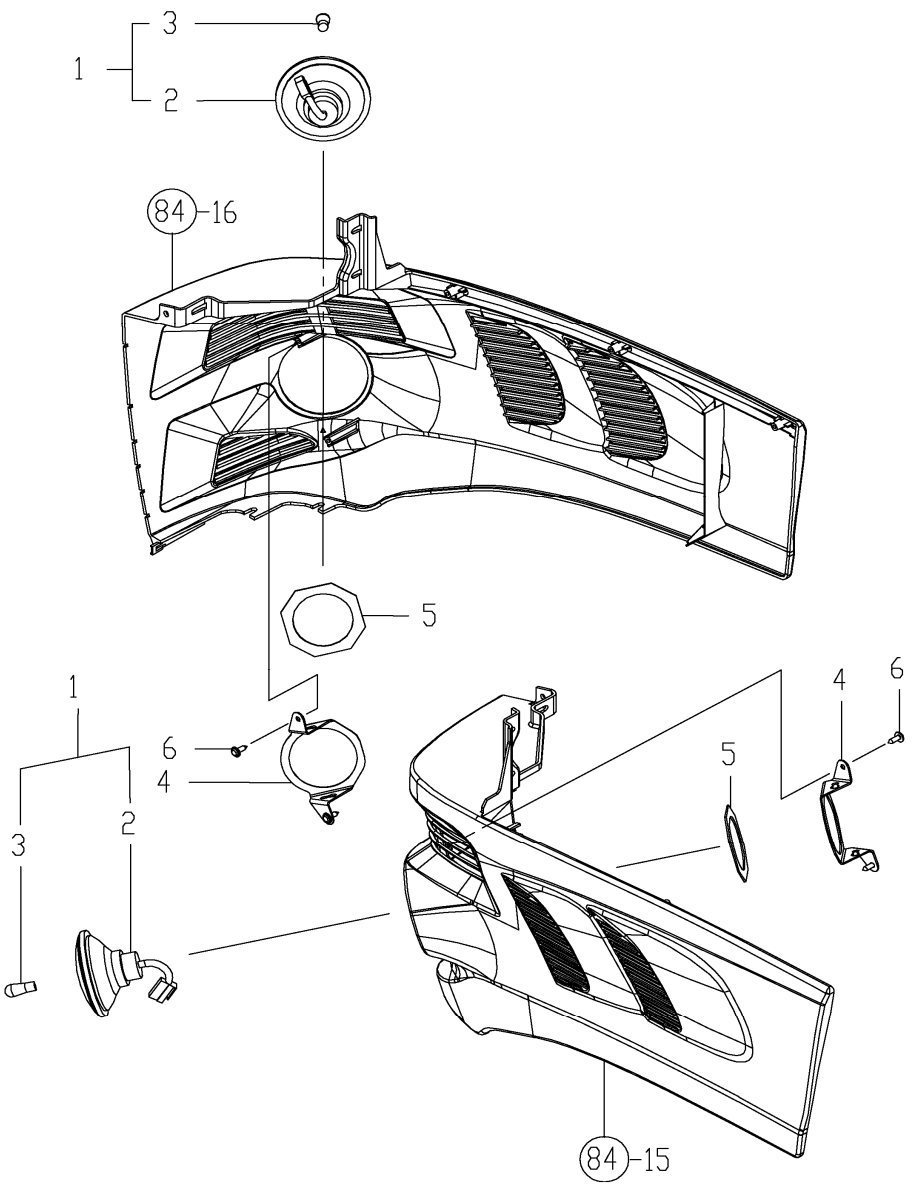

REF NO.	PART NUMBER	DESCRIPTION	QTY
1	CY-1A7880-53300	LAMP ASSY,SIDE	2
2	(ORDER REF NO.1)	CASE ASSY,SIDE LAMP	2
3	CY-1A7880-53320	BULB,12V/15W	2
4	CY-1A7880-61060	STAY,LAMP	2
5	CY-1A7880-61070	RUBBER,SIDE LAMP	2
6	CY-194420-61640	SCREW, M5X16	4

Copyright 2007 Cub Cadet Yanmar LLC

FIG. 83. METER

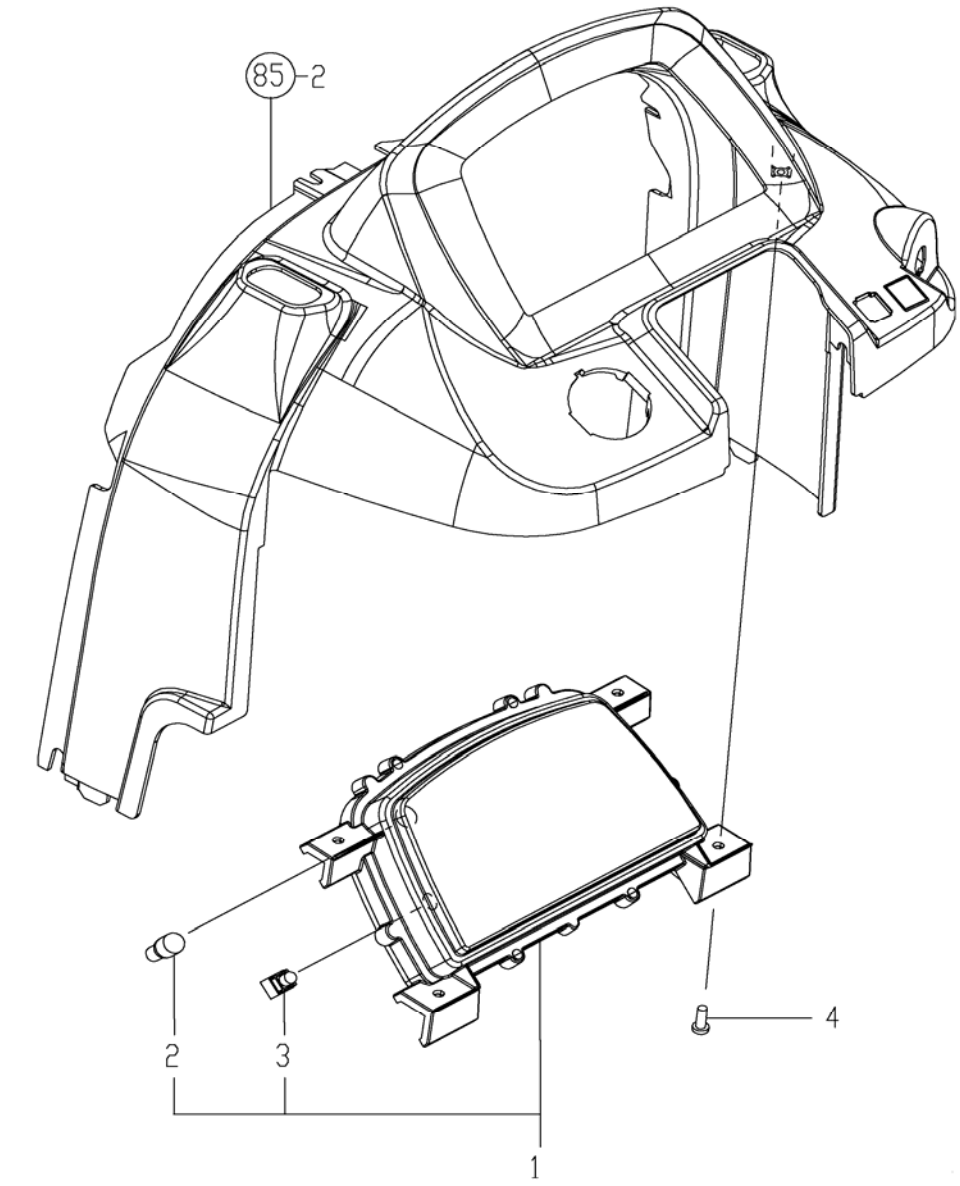

REF NO.	PART NUMBER	DESCRIPTION	QTY
1	CY-1A7880-56010	METER ASSY	1
2	CY-1A7510-56110	BULB	12
3	CY-198448-56150	BULB, 14V-1.4W	2
4	CY-22857-600160	SCREW, 6.0 X 16	4

Copyright 2007 Cub Cadet Yanmar LLC

FIG. 84. HOOD

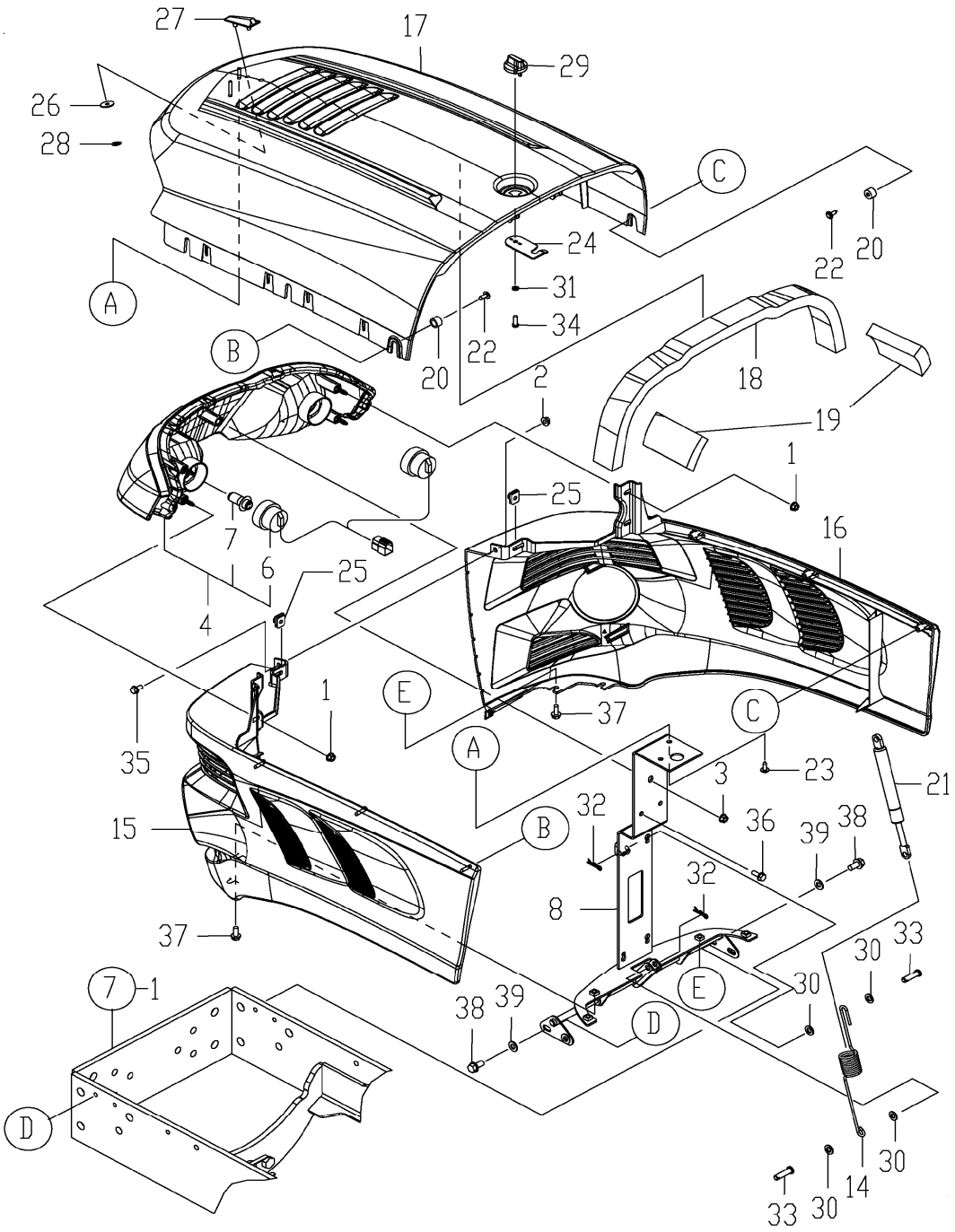

Copyright 2007 Cub Cadet Yanmar LLC

FIG. 84. HOOD

REF NO.	PART NUMBER	DESCRIPTION	QTY
1	CY-194990-22130	NUT, M6	4
2	CY-194990-22130	NUT, M6	1
3	CY-194990-22130	NUT, M6	1
4	CY-1A7880-53050	LAMP ASSY,HEAD	1
6	CY-1A7880-53070	WIRE,LEAD HEAD LAMP	1
7	CY-1A7880-53080	BULB,HALOGEN12V30/30	2
8	CY-1A7880-60900	HINGE CMP,HOOD	1
14	CY-1A7880-60990	SPRING, HOOD HINGE	1
15	CY-1A7880-61020	HOOD, LOWER LH	1
16	CY-1A7880-61030	HOOD, LOWER RH	1
17	CY-1A7880-61110	HOOD,UPPER	1
18	CY-1A7880-61170	SEAL,HOOD UPPER	1
19	CY-1A7880-61260	CUSHION,HOOD REAR	2
20	CY-1A8070-61330	COLLAR, 10X15X10	6
21	CY-1A7880-61370	SPRING,GAS	1
22	CY-194420-61640	SCREW, M5X16	6
23	CY-194420-61640	SCREW, M5X16	2
24	CY-1A7880-61760	STOPPER(HOOD	1
25	CY-198071-61890	NUT, M6	2
26	CY-194555-65130	CUSHION	2
27	CY-194940-65590	MARK, TOP	1
28	CY-194200-65611	NUT, M5	2
29	CY-1E6460-91573	KNOB, SACKER	1
30	CY-22117-080000	WASHER, 8	4
31	CY-22137-050000	WASHER, 5	1
32	CY-22372-080000	PIN, 8	2
33	CY-22487-080260	PIN, 8 X 26	2
34	CY-22857-500161	SCREW, 5.0 X 16	1
35	CY-26106-060122	BOLT, 6 X 12	1
36	CY-26106-060162	BOLT, 6 X 16	2
37	CY-26106-060162	BOLT, 6 X 16	4
38	CY-26106-080162	BOLT, 8 X 16	4
39	CY-22137-080000	WASHER 8, POLISHED	4

Copyright 2007 Cub Cadet Yanmar LLC

THIS PAGE INTENTIONALLY LEFT BLANK

Copyright 2007 Cub Cadet Yanmar LLC

FIG. 85. DASHBOARD A

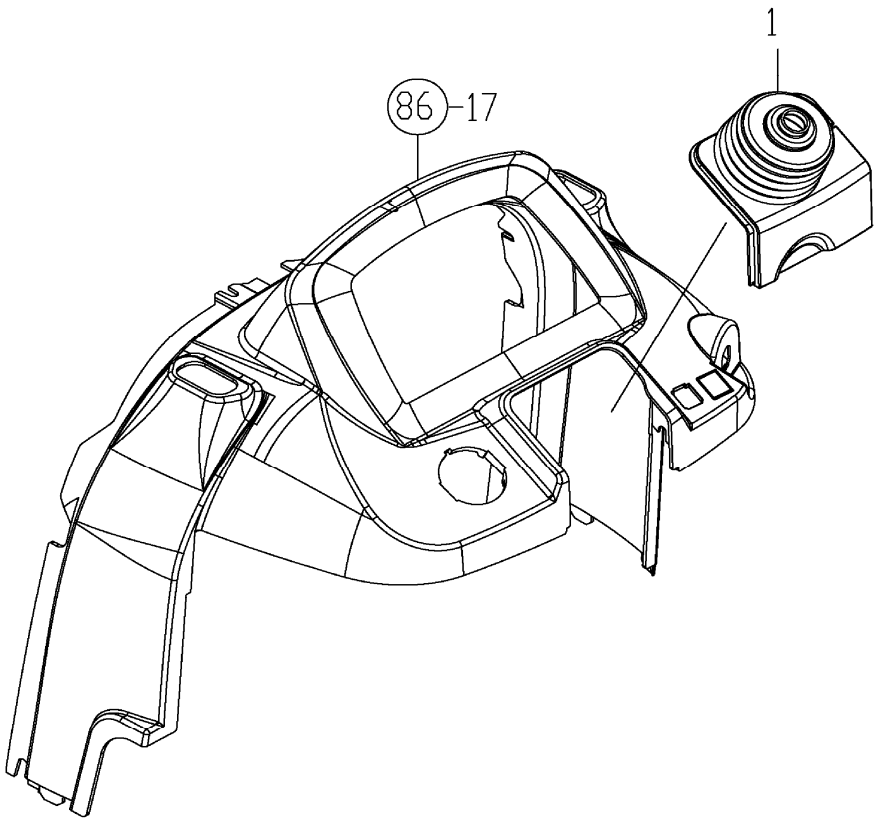

REF NO.	PART NUMBER	DESCRIPTION	QTY
1	CY-1A7880-17350	BOOT	1

Copyright 2007 Cub Cadet Yanmar LLC

FIG. 86. DASHBOARD B

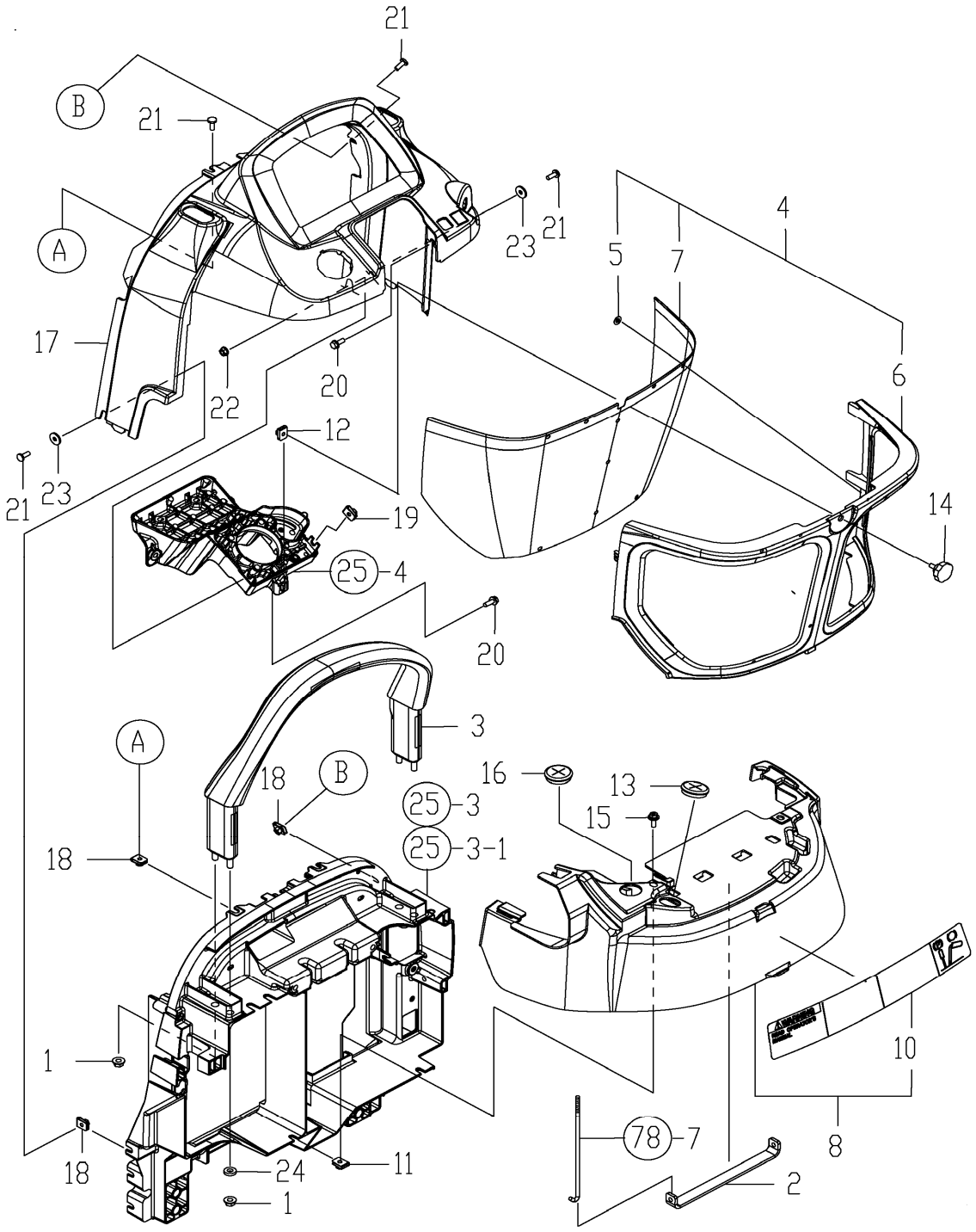

Copyright 2007 Cub Cadet Yanmar LLC

FIG. 86. DASHBOARD B

REF NO.	PART NUMBER	DESCRIPTION	QTY
1	CY-194990-22140	NUT, M8	4
2	CY-1A7880-58150	STAY, BATTERY	1
3	CY-1A7880-61510	GRIP	1
4	N/A	DASHBOARD ASSY, L WR	1
5	CY-1C6460-38240	NUT, 5	6
6	CY-1A7880-61650	COVER, DASHBOARD LWR	1
7	CY-1A7880-61670	NET, DASHCOVER	1
8	CY-1A7880-61690	COVER M ASY, DASH BTM	1
10	CY-1A7880-65600	LABEL, CAUTION, GENERAL	1
11	CY-198071-61890	NUT, M6	2
12	CY-198071-61890	NUT, M6	1
13	CY-1A6150-76740	GROMMET 31	1
14	CY-26064-060151	BOLT, 6 X 15	1
15	CY-198461-60590	BOLT, M6X20	2
16	CY-1A6150-76740	GROMMET 31	1
17	CY-1A7880-61600	COVER, DASHBOARD UPPER	1
18	CY-198071-61890	NUT, M6	5
19	CY-198071-61890	NUT, M6	1
20	CY-26106-060162	BOLT, 6 X 16	2
21	CY-26589-060162	SCREW, 6 X 16	5
22	CY-194990-22130	NUT W/WASHER 6	1
23	CY-22157-060000	WASHER 6	2
24	CY-194145-22430	SPACER xxxxx & after	1

Copyright 2007 Cub Cadet Yanmar LLC

FIG. 87. FENDER

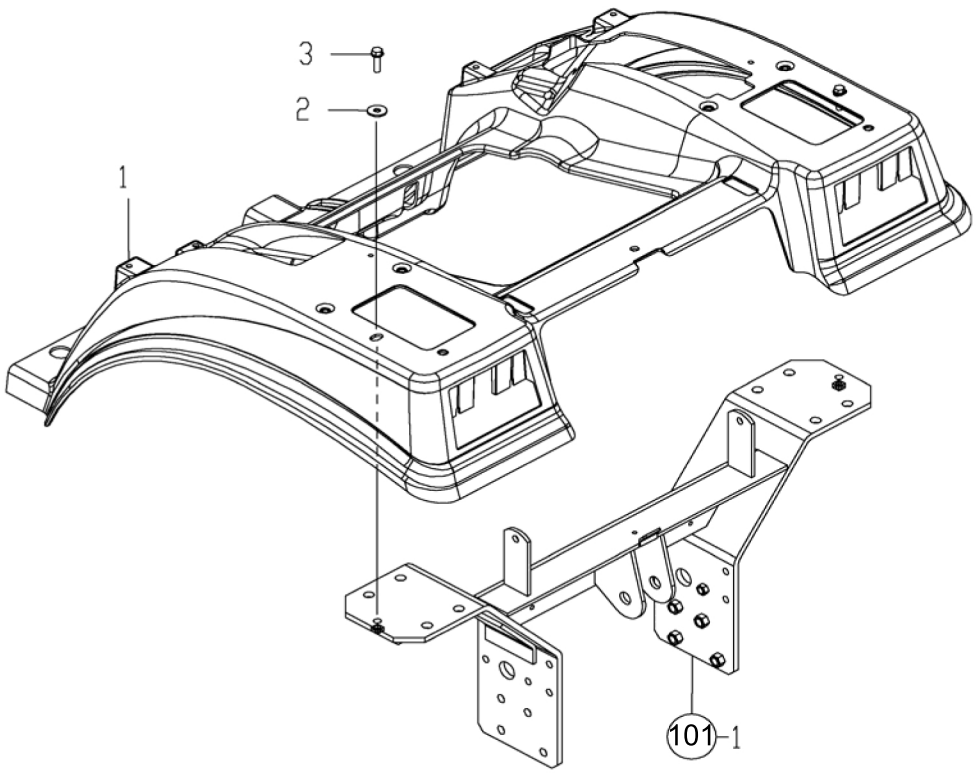

REF NO.	PART NUMBER	DESCRIPTION	QTY
1	CY-1A7880-62100	FENDER	1
2	CY-22157-080000	WASHER,8	2
3	CY-26106-080302	BOLT, 8 X 30	2

Copyright 2007 Cub Cadet Yanmar LLC

FIG. 88. LEVER GUIDE

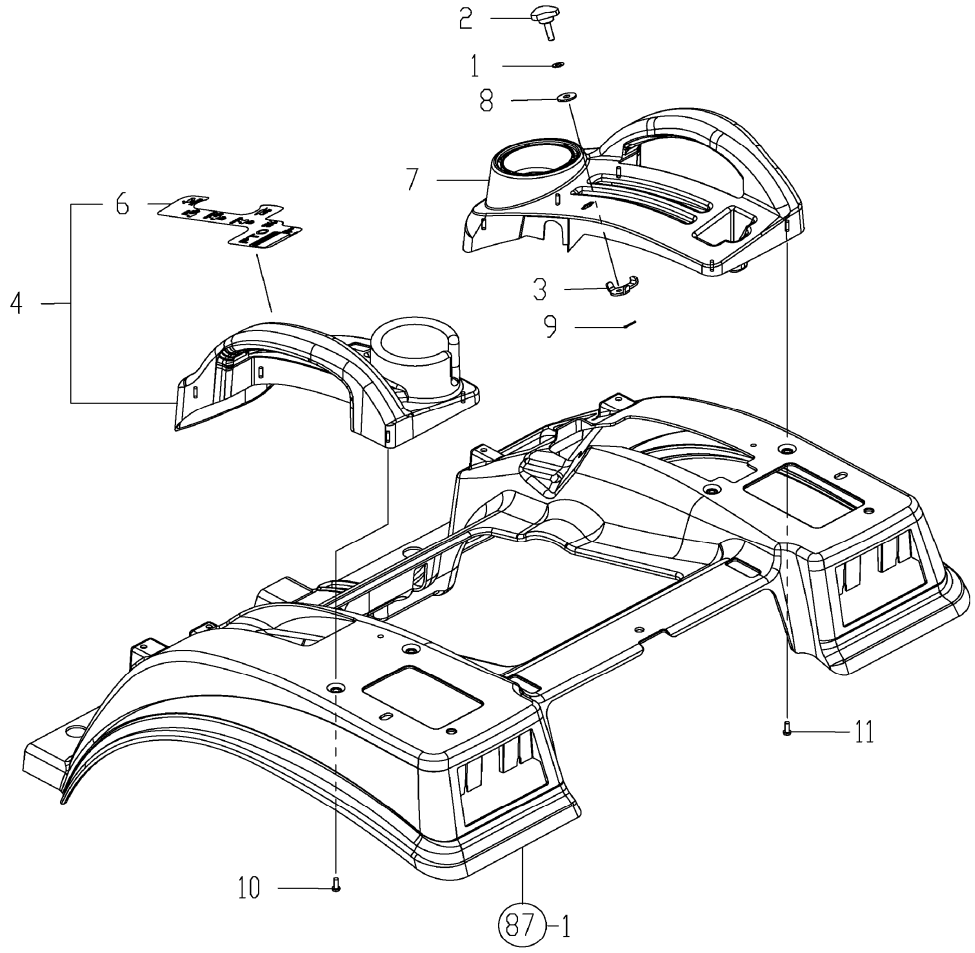

REF NO.	PART NUMBER	DESCRIPTION	QTY
1	CY-194300-37570	SPRING,	1
2	CY-198165-47750	KNOB, HYD.CONTROL	1
3	CY-1A7510-47760	STOPPER, HYD.CONTROL	1
4	CY-1A7880-62240	GUIDE M ASY,LEVER L	1
6	CY-1A7880-65350	LABEL, LEVERGUIDE L	1
7	CY-1A7880-62300	GUIDE, LEVER R	1
8	CY-22157-080000	WASHER, 8	1
9	CY-22417-200160	PIN, 2.0 X 16	1
10	CY-22857-600160	SCREW, 6.0 X 16	4
11	CY-22857-600160	SCREW, 6.0 X 16	4

Copyright 2007 Cub Cadet Yanmar LLC

FIG. 89. FOOTREST STAY

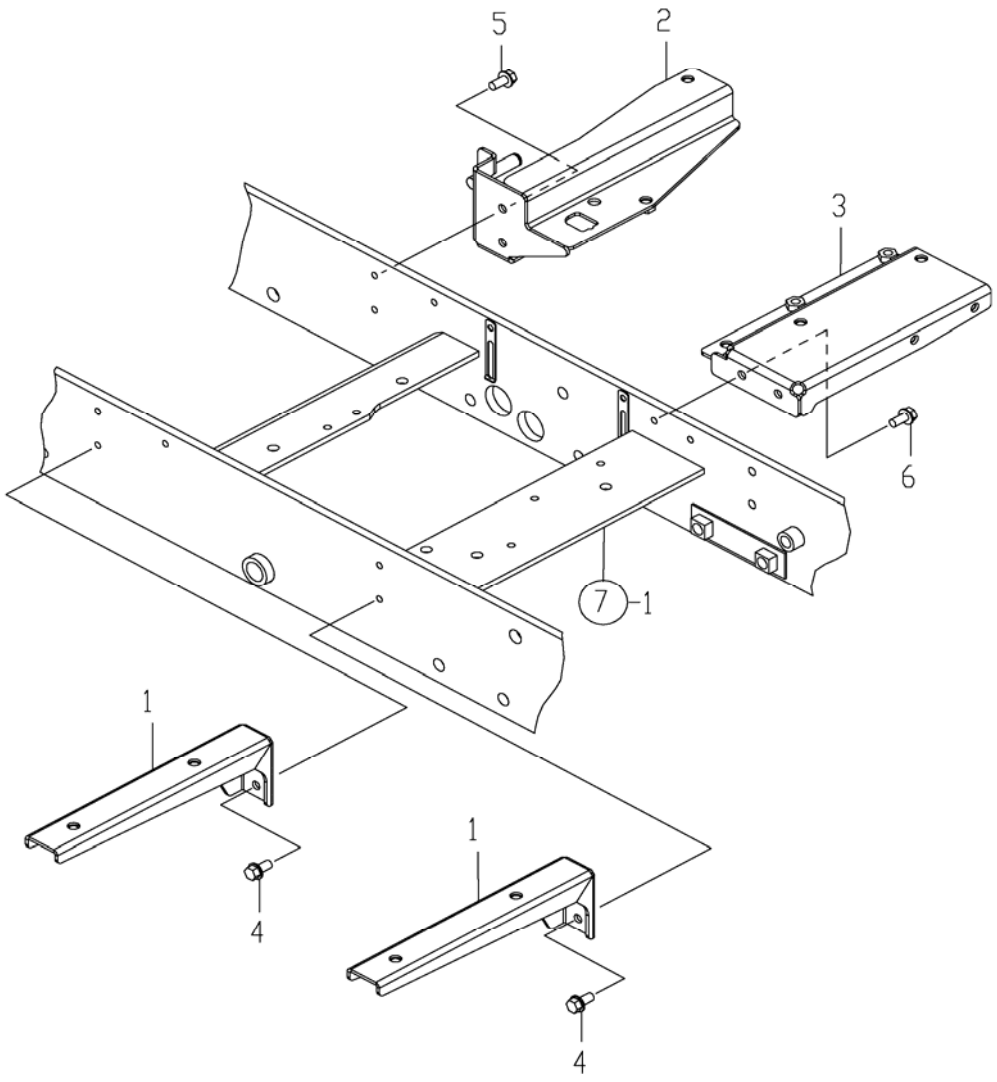

REF NO.	PART NUMBER	DESCRIPTION	QTY
1	CY-1A7880-62550	STAY L,STEP CMP	2
2	CY-1A7880-62600	STAY RF,STEP CMP	1
3	CY-1A7880-62650	STAY RR,STEP CMP	1
4	CY-26106-080162	BOLT, 8 X 16	4
5	CY-26106-080162	BOLT, 8 X 16	2
6	CY-26106-080162	BOLT,8 X 16	2

Copyright 2007 Cub Cadet Yanmar LLC

FIG. 90. FOOTREST

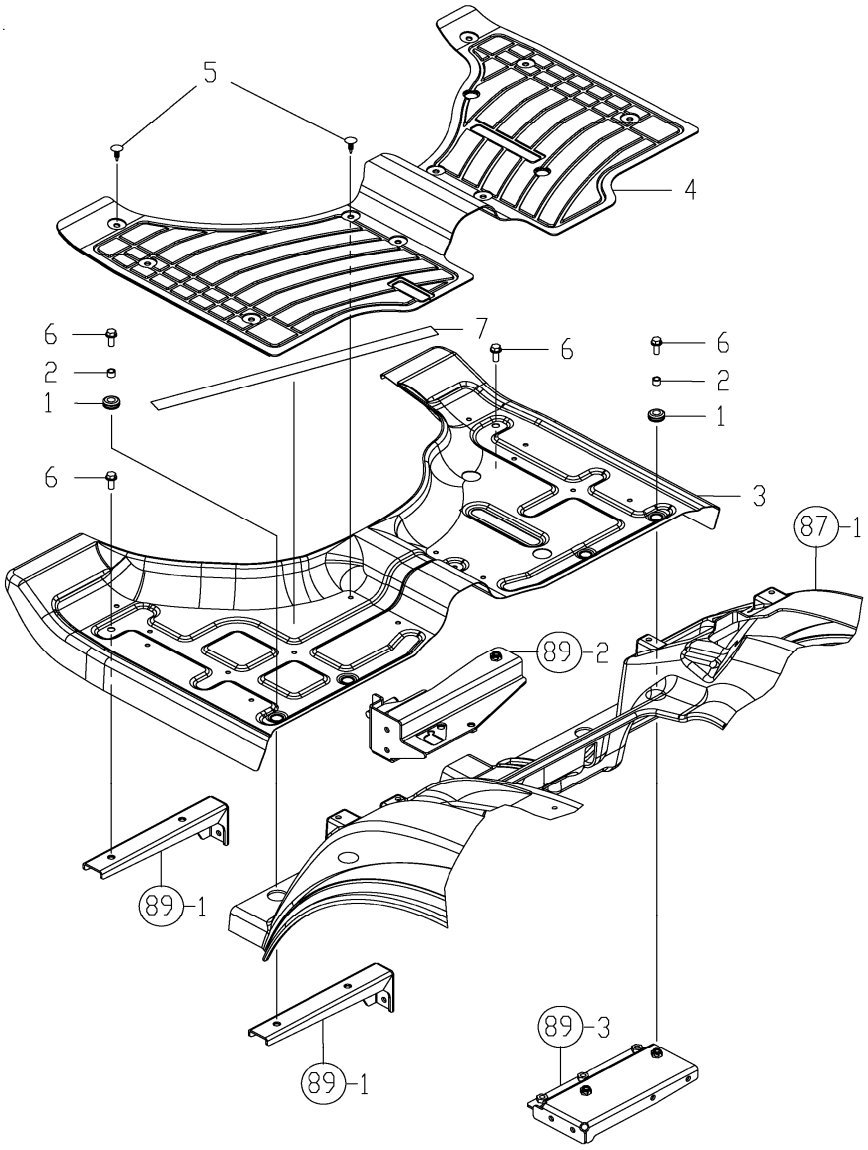

REF NO.	PART NUMBER	DESCRIPTION	QTY
1	CY-198360-03260	CAP, 12	4
2	CY-198360-03270	SPACER	4
3	CY-1A7880-62500	STEP	1
4	CY-1A7880-62510	SHEET ,STEP	1
5	CY-198162-62630	FASTENER, CUSHION	10
6	CY-26106-080202	BOLT, 8 X 20	6
7	CY-198093-84860	TAPE, DOUBLE STICK	2

Copyright 2007 Cub Cadet Yanmar LLC

THIS PAGE INTENTIONALLY LEFT BLANK

Copyright 2007 Cub Cadet Yanmar LLC

FIG. 91. SEAT

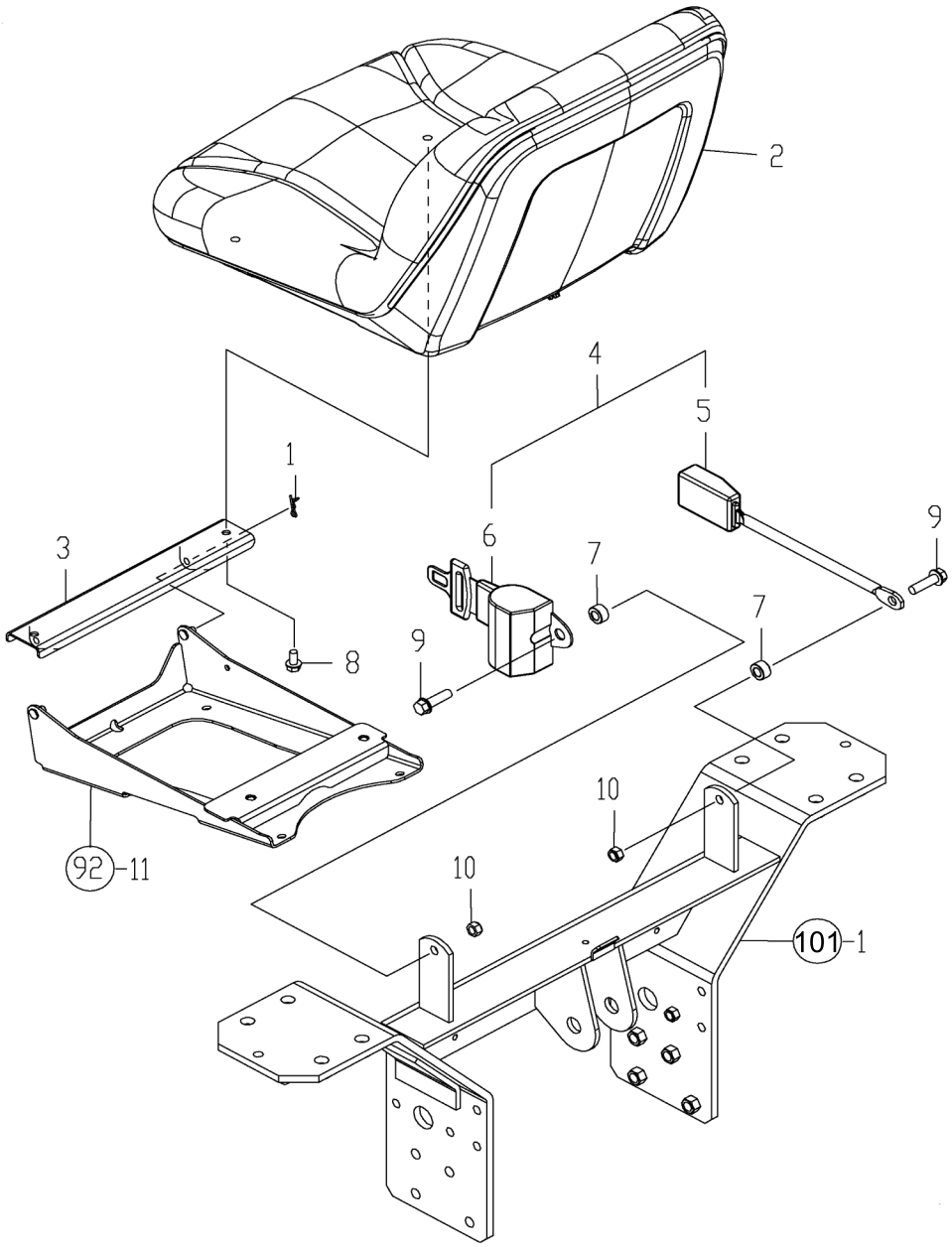

REF NO.	PART NUMBER	DESCRIPTION	QTY
1	CY-1C6281-52320	PIN, SNAP	1
2	CY-1A7880-63010	SEAT ASSY, OPERATOR	1
3	CY-1A7880-63100	HINGE, SEAT CMP	1
4	CY-1A8160-63400	BELT,SAFETY CMP (INCL. REF NO. 5 & 6)	1
7	CY-1A8160-63440	COLLAR,SEAT BELT	2
8	CY-26106-080162	BOLT, 8 X 16	2
9	CY-26106-100352	BOLT, 10 X 35	2
10	CY-26346-100002	U-NUT, 10	2

Copyright 2007 Cub Cadet Yanmar LLC

FIG. 92. SEAT STAY

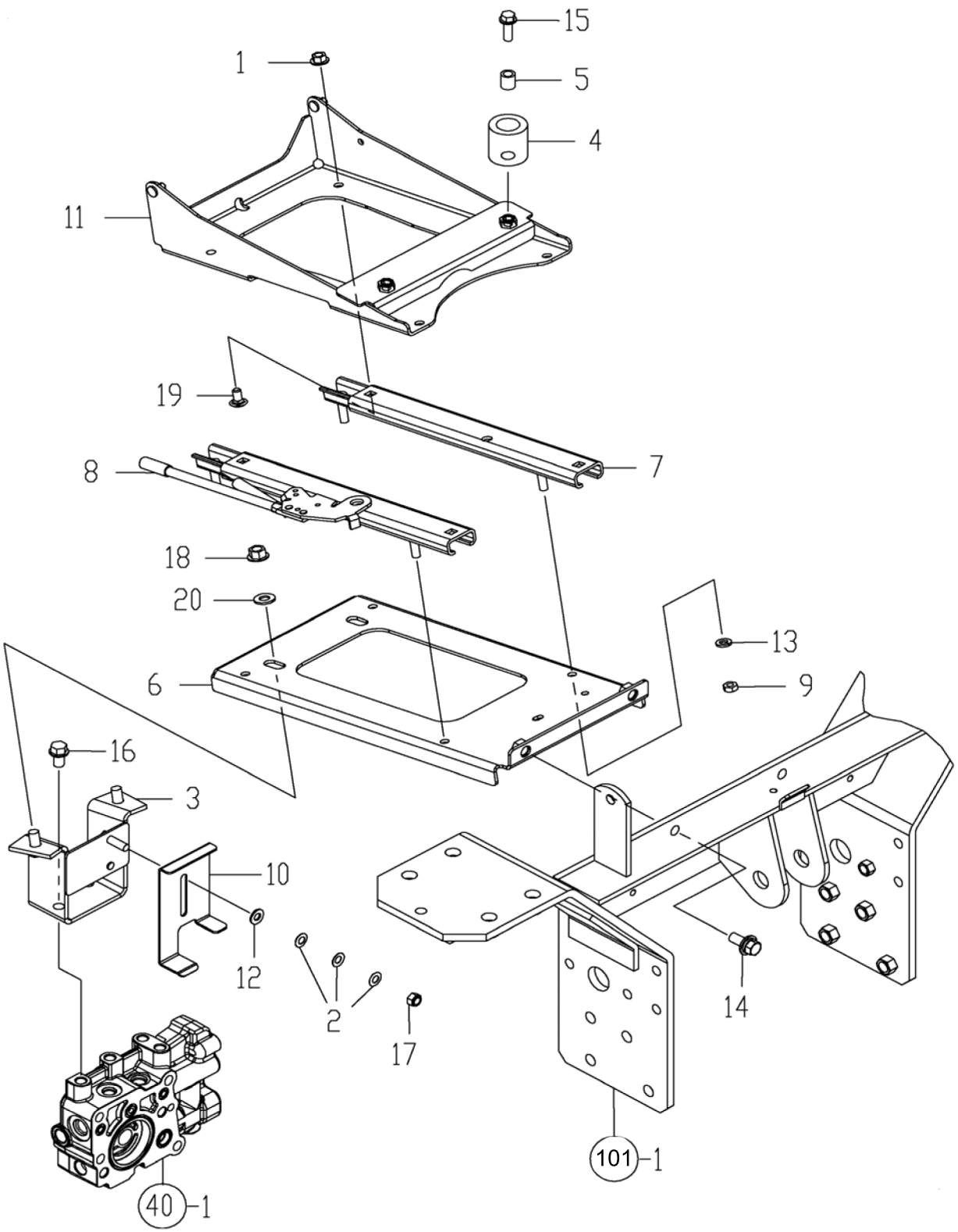

Copyright 2007 Cub Cadet Yanmar LLC

FIG. 92. SEAT STAY

REF NO.	PART NUMBER	DESCRIPTION	QTY
1	CY-194990-22140	NUT, M8	4
2	CY-194300-37570	SPRING,	3
3	CY-1A7880-63200	STAY(SEAT CMP	1
4	CY-194151-63240	CUSHION	2
5	CY-194151-63250	COLLAR	2
6	CY-1A7880-63300	STAY CMP,RAIL A	1
7	CY-1A7880-63400	RAIL CMP,SEAT	1
8	CY-1A7880-63410	RAIL CMP,SEAT LEVER	1
9	CY-1A7880-63420	UNC NUT 5/16-18	4
10	CY-1A7880-63450	PLATE,SWITCH	1
11	CY-1A7880-63500	STAY CMP,RAIL B	1
12	CY-22137-080000	WASHER, 8	1
13	CY-22217-080000	WASHER, 8	4
14	CY-26014-100252	BOLT, 10 X 25	2
15	CY-26106-080252	BOLT, 8 X 25	2
16	CY-26106-100162	BOLT, 10 X 16	2
17	CY-26346-080002	U-NUT, 8	1
18	CY-26366-100002	NUT, 10	2
19	CY-26487-080163	BOLT, 8 X 16	4
20	CY-22137-100000	WASHER, 10	2

Copyright 2007 Cub Cadet Yanmar LLC

FIG. 93. LABELS (1)

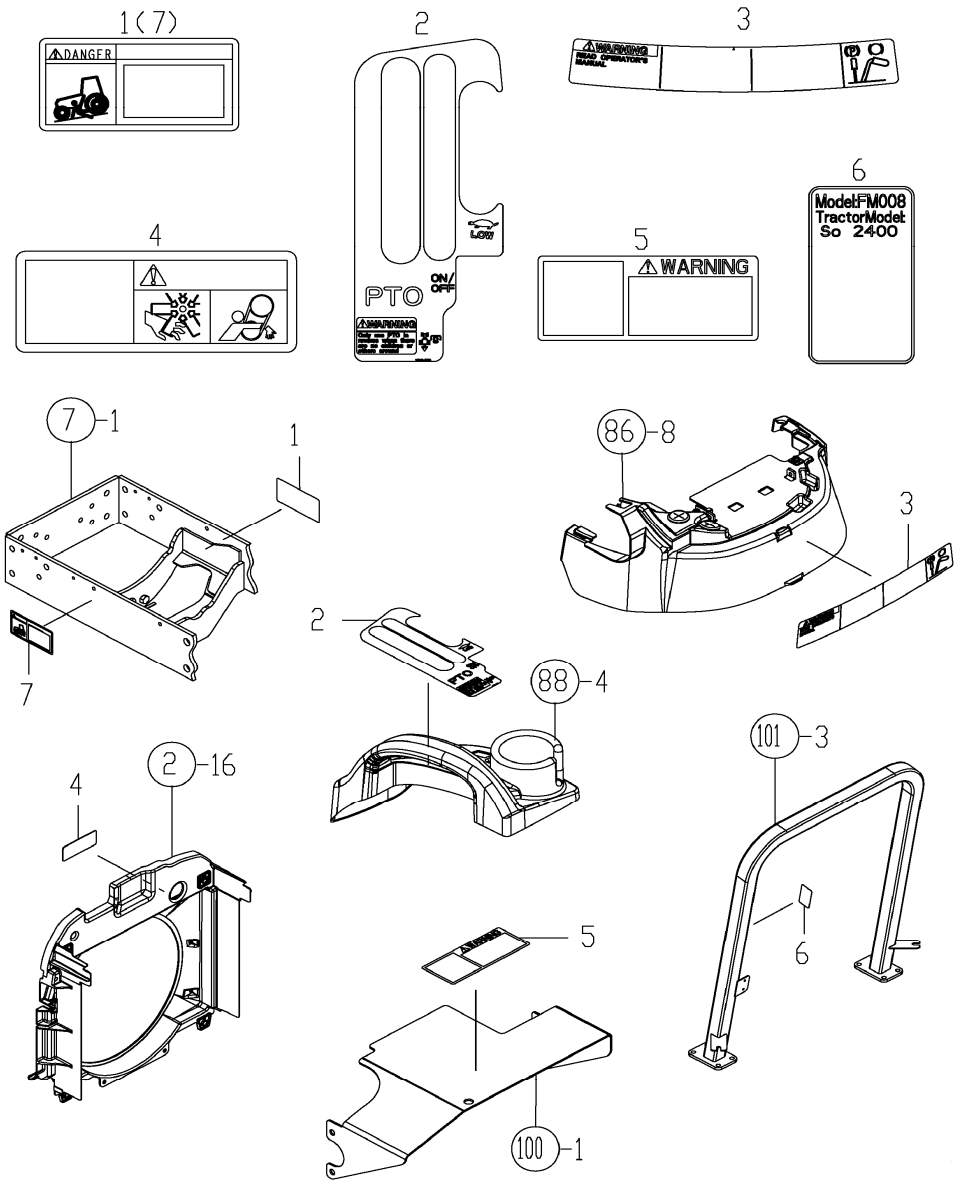

REF NO.	PART NUMBER	DESCRIPTION	QTY
1	CY-1A8160-65300	LABEL,DANGER,START	1
2	CY-1A7880-65350	LABEL, LEVERGUIDE L	1
3	CY-1A7880-65600	LABEL,CAUTION,GENERA	1
4	CY-1A7880-65620	LABEL,WARNING,FAN	1
5	CY-198220-65621	LABEL,PTO WARNING	1
6	N/A	LABEL,ROPS	1
7	CY-1A8160-65310	LABEL, WARNING STOP	1

Copyright 2007 Cub Cadet Yanmar LLC

FIG. 94. LABELS (2)

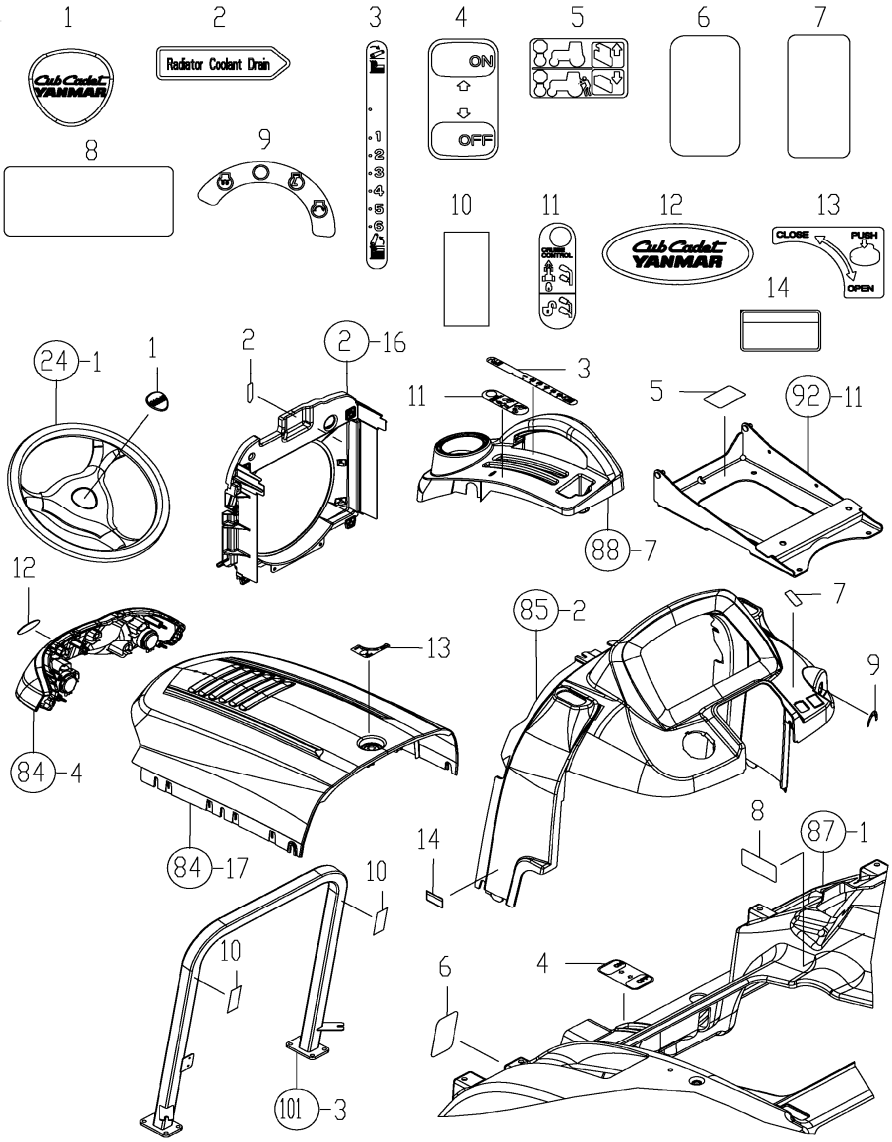

REF NO.	PART NUMBER	DESCRIPTION	QTY
1	CY-1A7880-15780	LABEL, STEERING WHEEL	1
2	CY-1A7340-65080	LABEL, DRAIN	1
3	CY-1A7880-65330	LABEL, POSITION	1
4	CY-1A7880-65370	LABEL, LEVER 4WD	1
5	CY-1A7880-65380	LABEL, LEVER VALVE	1
6	CY-1A7880-65390	LABEL, DIFF LOCK	1
7	CY-194215-65510	LABEL, ACCELERAT. LVR.	1
8	CY-1A7880-65630	LABEL, SOCKET	1
9	CY-1A7880-65720	LABLE, START SWITCH	1
10	CY-1A8160-65860	TAPE, REF.50X115	2
11	CY-1A7880-65340	LABEL, CRUISE CONTROL	1
12	CY-1A7880-65560	LABEL, CENTER LOGO	1
13	CY-1A7880-65570	LABEL, HOOD OPEN	1
14	CY-114110-07760	LABEL, FUEL OIL	1

Copyright 2007 Cub Cadet Yanmar LLC

FIG. 95. LABELS (3)

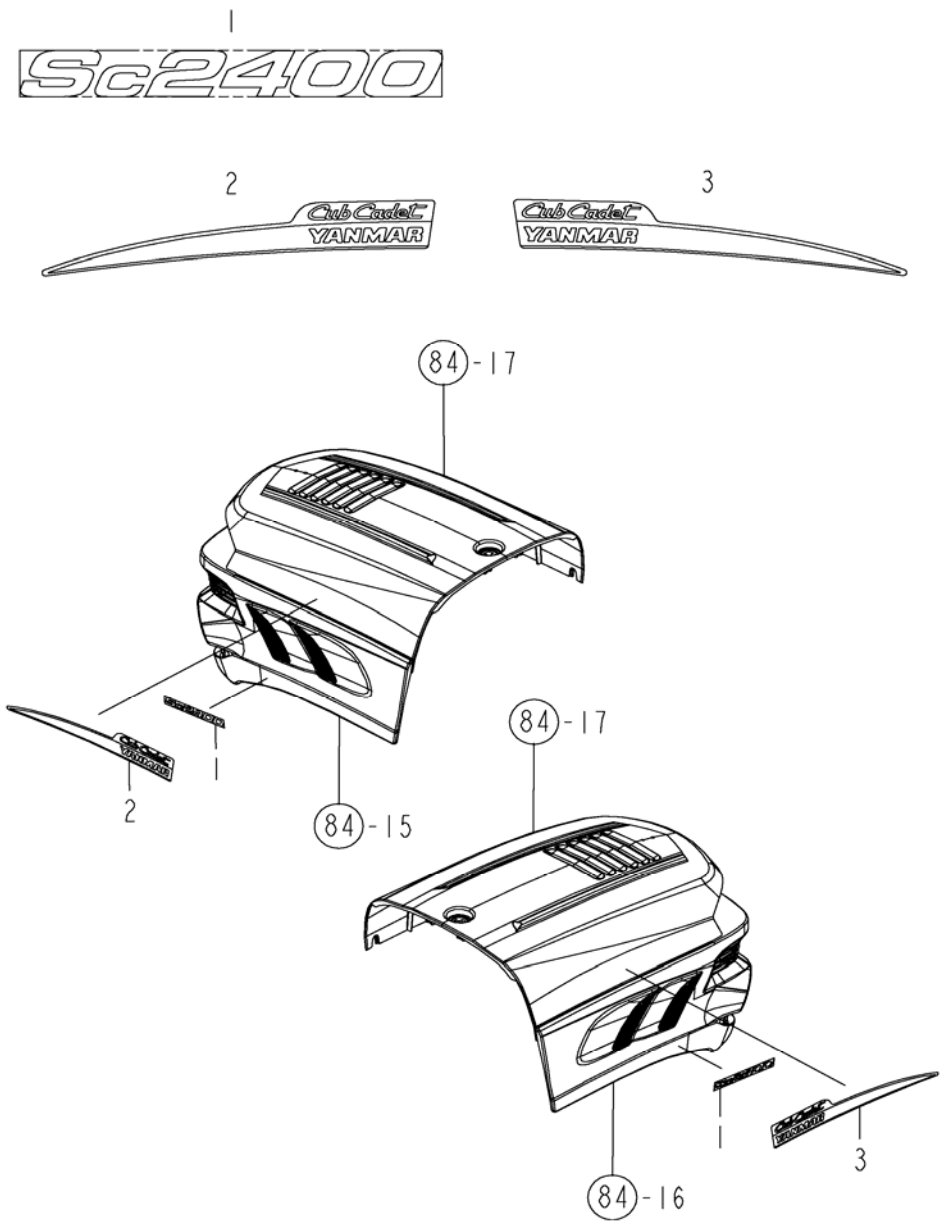

REF NO.	PART NUMBER	DESCRIPTION	QTY
1	CY-1A7880-64710	LABEL ,MODEL	2
2	CY-1A7880-65580	LABEL,LOGO L.H.	1
3	CY-1A7880-65590	LABEL,LOGO R.H.	1

Copyright 2007 Cub Cadet Yanmar LLC

FIG. 96. LABELS (4)

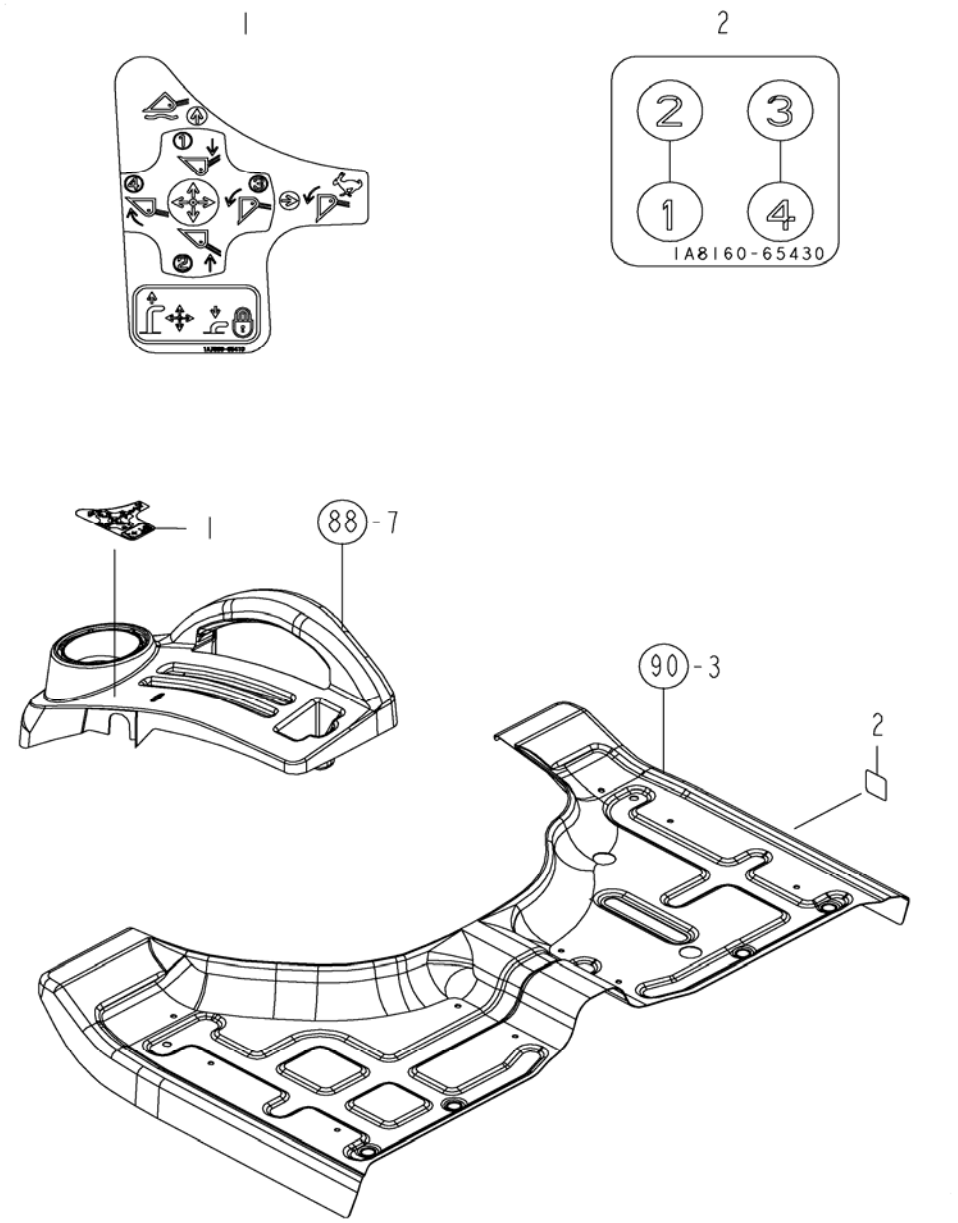

REF NO.	PART NUMBER	DESCRIPTION	QTY
1	CY-1A7880-65410	LABEL,SCV LEVER	1
2	CY-1A8160-65430	LABEL,SCV COUPLER	1

Copyright 2007 Cub Cadet Yanmar LLC

THIS PAGE INTENTIONALLY LEFT BLANK

Copyright 2007 Cub Cadet Yanmar LLC

FIG. 97. CYLINDER BLOCK

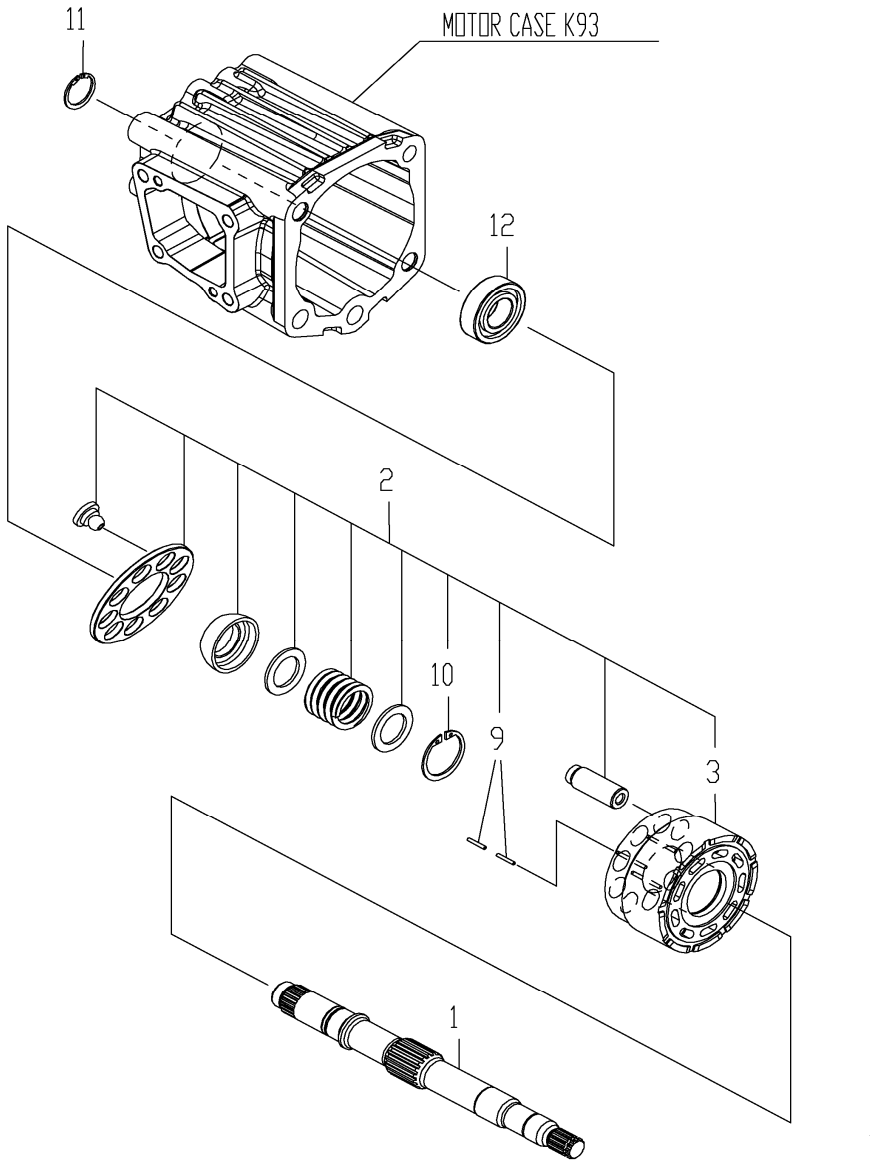

REF NO.	PART NUMBER	DESCRIPTION	QTY
1	CY-187K06-25020	MOTOR SHAFT	1
2	CY-168HK0-29600	BLOCK ASSY, CYL	1
3	N/A	BLOCK, CYLINDER (ORDER REF NO.2)	1
9	CY-168HK0-29690	PIN, F2X13.8	6
10	CY-22252-000320	RING, 32	1
11	CY-22292-000200	RING, 20	1
12	CY-24102-060044	BEARING, 6004U	1

Copyright 2007 Cub Cadet Yanmar LLC

FIG. 98. THREE POINT LINK

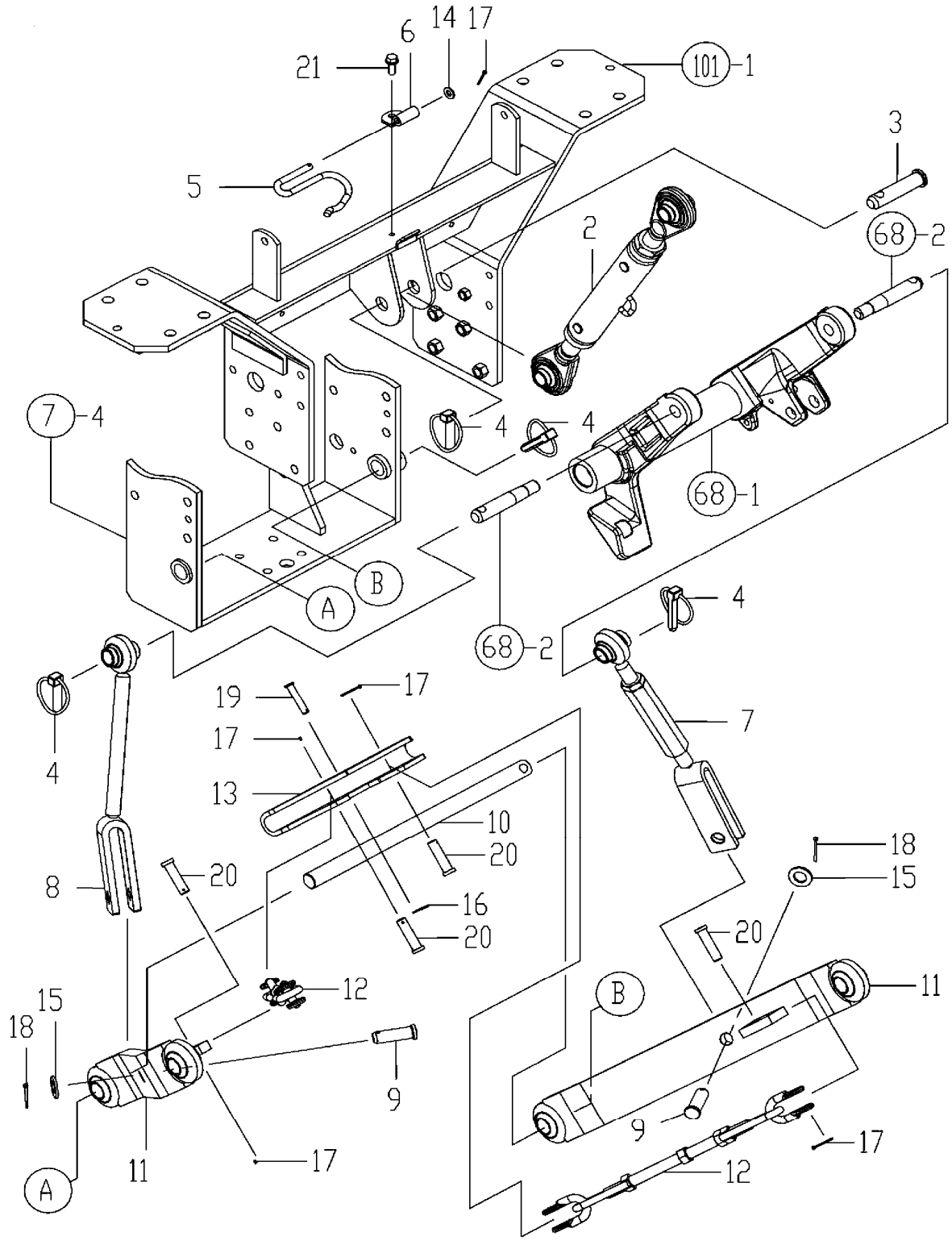

Copyright 2007 Cub Cadet Yanmar LLC

FIG. 98. THREE POINT LINK

REF NO.	PART NUMBER	DESCRIPTION	QTY
1	N/A	3P LINK KIT	1
2	CY-1A7880-71110	TOP LINK COMPLETE	1
2	CY-1A7880-71210	EYE BOLT L CMP Not Shown	1
2	CY-1A7880-71220	EYE BOLT R CMP Not Shown	1
2	CY-1A7335-71250	CAP Not Shown	4
2	CY-1A7880-71500	TURN BUCKLE ASSY Not Shown	1
2	CY-1A7880-71580	TURN BUCKLE CMP Not Shown	1
2	CY-22351-050025	PIN 5.0 X 25 Not Shown	2
3	CY-1A7500-71120	PIN, UPPER LINK	1
4	CY-1A7500-71130	PIN ASSY, LINTCH	4
5	CY-1A7880-71550	SPRING	1
6	CY-1A7880-71720	PLATE (TOPLINK	1
7	CY-1A7880-72100	ROD CMP, LIFT R	1
8	CY-1A7880-72300	ROD CMP, LIFT L.H.	1
9	CY-198234-72550	PIN, 16X44	2
10	CY-1A7880-73150	BAR, LOWER LINK	1
11	CY-1A7880-73500	LINK ASSY, LOWER	2
12	CY-1A7880-74100	CHAIN ASSY, CHECK	2
13	CY-1A7880-74550	HINGE, CHAIN	1
14	CY-22137-080000	WASHER, 8	1
15	CY-22137-160000	WASHER, 16	2
16	CY-22372-080000	PIN, 8	1
17	CY-22417-250250	PIN, 2.5 X 25	5
18	CY-22417-320320	PIN, 3.2 X 32	2
19	CY-22487-080400	PIN, 8 X 40	1
20	CY-22487-120400	PIN, 12 X 40	4
21	CY-26106-080202	BOLT, 8 X 20	1

Copyright 2007 Cub Cadet Yanmar LLC

FIG. 99.SAFETY COVER(PTO)

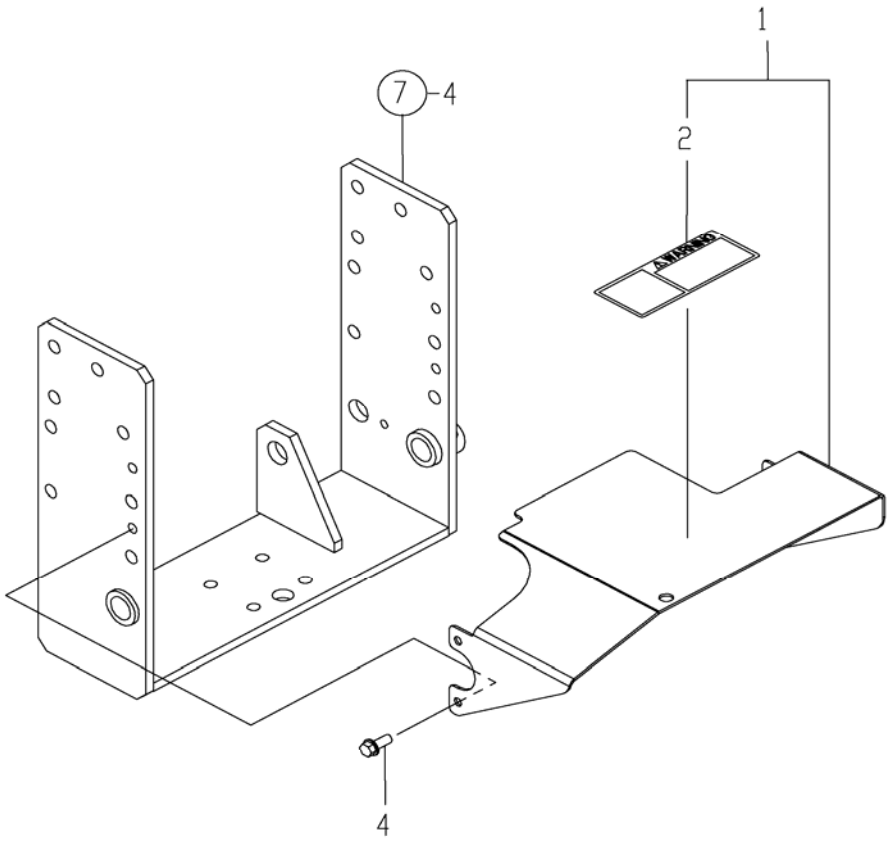

REF NO.	PART NUMBER	DESCRIPTION	QTY
1	CY-1A7880-71130	COVER M ASY,PTO	1
2	CY-198220-65621	LABEL,PTO WARNING	1
4	CY-26106-080202	BOLT, 8 X 20	4

Copyright 2007 Cub Cadet Yanmar LLC

FIG.100. ROPS UPPER

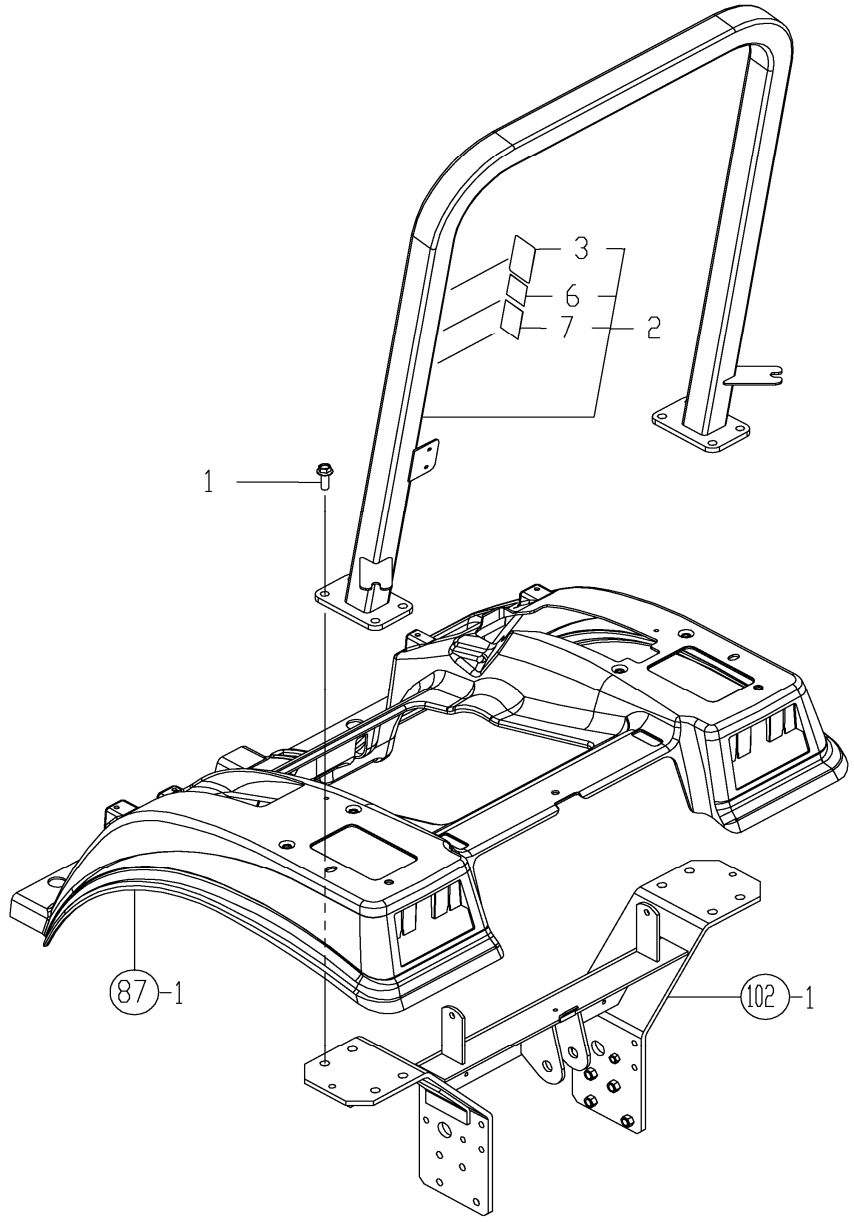

REF NO.	PART NUMBER	DESCRIPTION	QTY
1	CY-1A8160-11520	BOLT, M12X34	8
2	CY-1A7880-85000	UPPER TUBE, M ASSY	1
3	CY-1A7800-65980	LABEL,ROPS	1
5	N/A	UPPER TUBE CMP	1
6	CY-1A7880-85170	SAFETY DECAL	1
7	CY-1A7880-85180	SAFETY DECAL (BELT)	1

Copyright 2007 Cub Cadet Yanmar LLC

FIG.101. LOWER FRAME

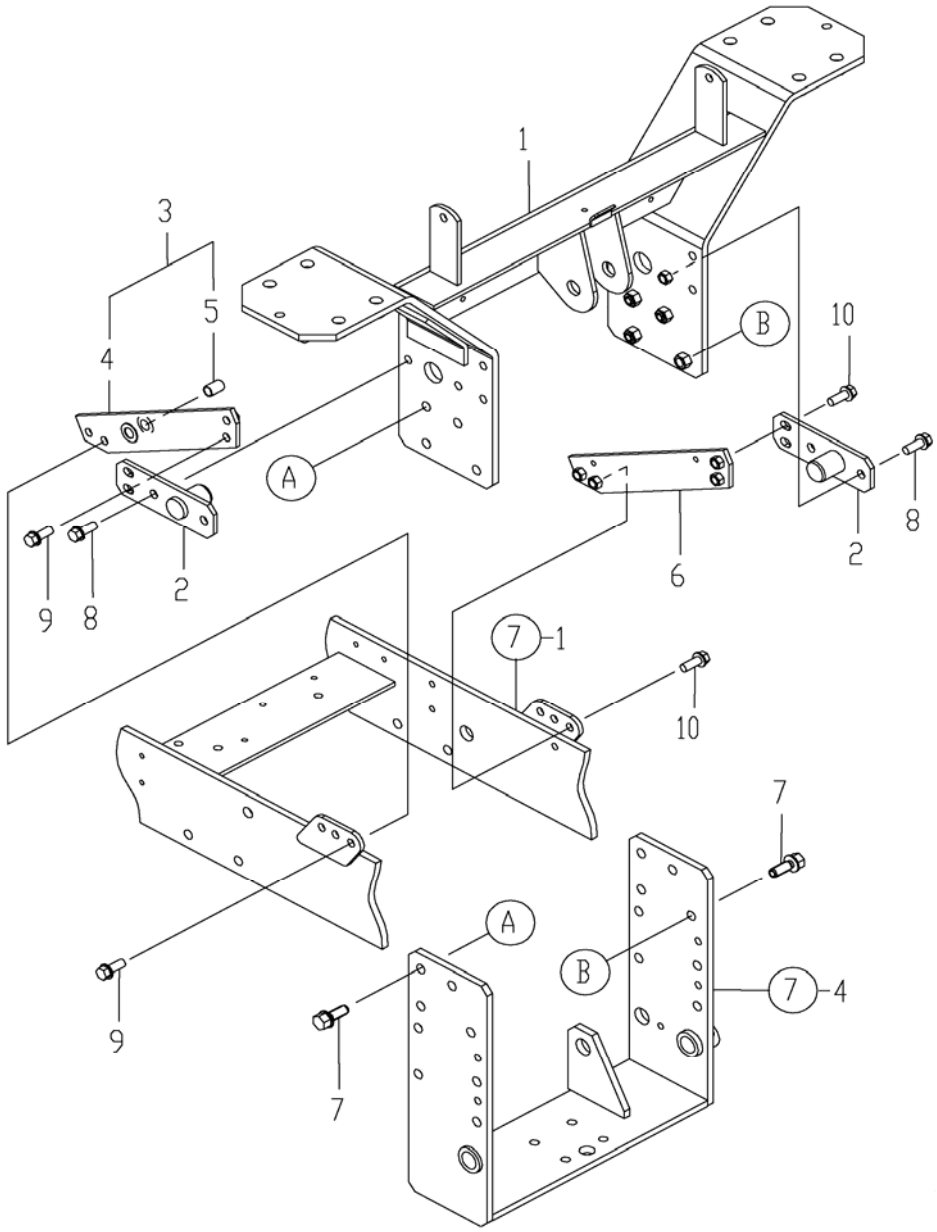

REF NO.	PART NUMBER	DESCRIPTION	QTY
1	CY-1A7880-85300	LOWER FRAME CMP	1
2	CY-1A7880-85430	PLATE,SIDE CMP	2
3	N/A	FRAME L, JOINT ASSY	1
4	CY-1A7880-85500	FRAME L,JOINT CMP	1
5	CY-24550-012200	BEARING, 12 X 20	1
6	CY-1A7880-85550	FRAME R,JOINT CMP	1
7	CY-1A6770-85920	BOLT, M12X30	8
8	CY-26106-100252	BOLT, 10 X 25	4
9	CY-26106-100252	BOLT, 10 X 25	4
10	CY-26106-100252	BOLT, 10 X 25	4

Copyright 2007 Cub Cadet Yanmar LLC

FIG. 102. SMV

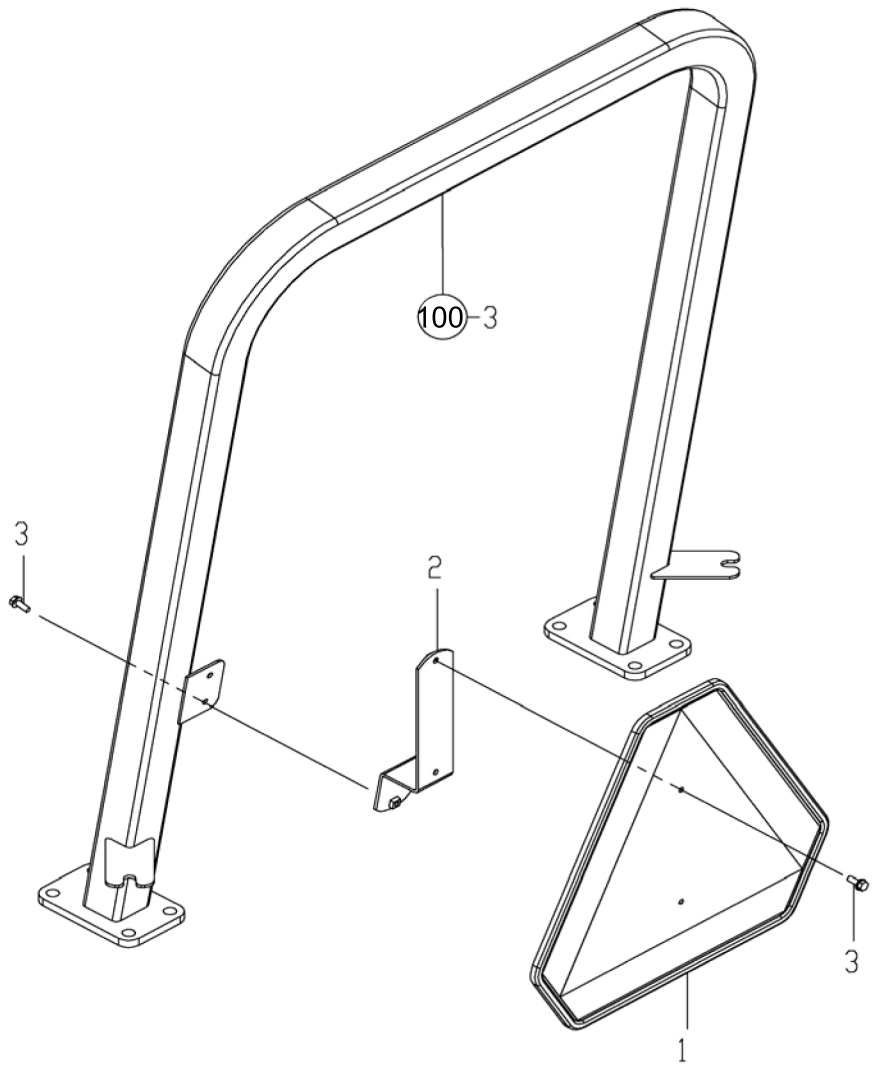

REF NO.	PART NUMBER	DESCRIPTION	QTY
1	CY-1A8160-65800	EMBLEM,SMV ASSEMBLEY	1
2	CY-1A7880-85610	STAY,SMV CMP	1
3	CY-26106-060162	BOLT, 6 X 16	4

Copyright 2007 Cub Cadet Yanmar LLC

FIG. 103. FRONT HITCH

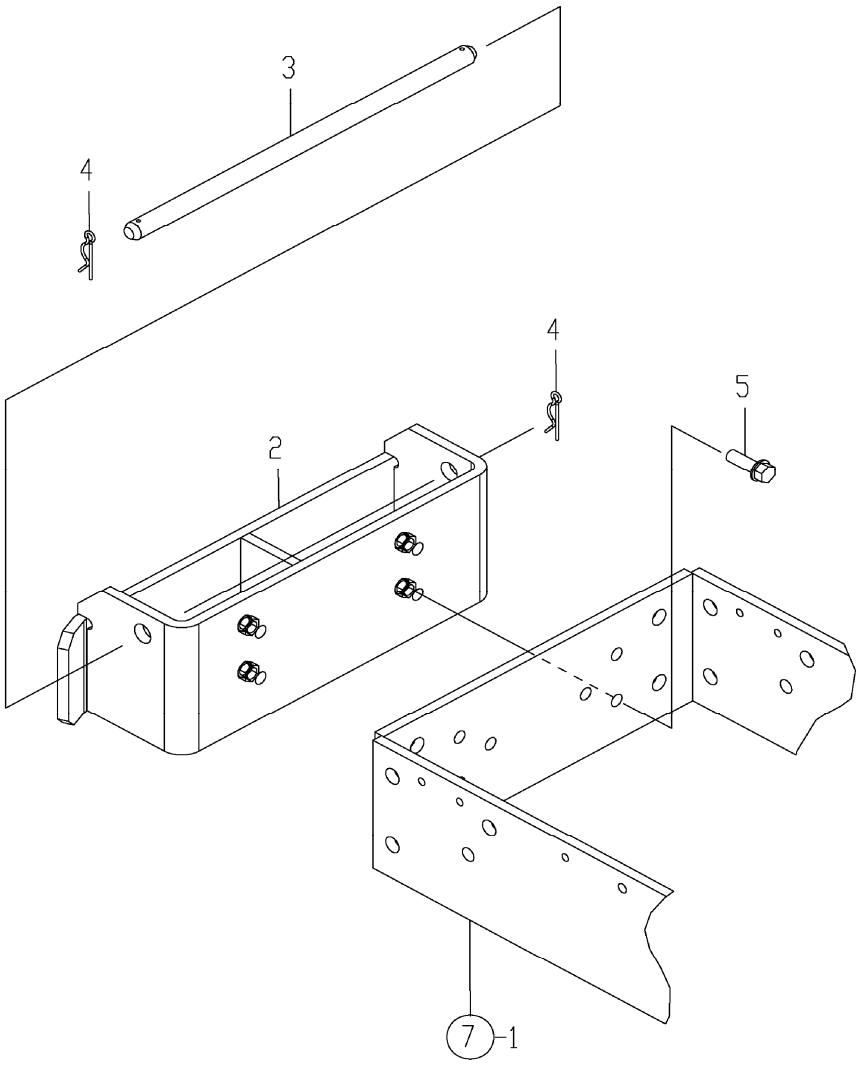

REF NO.	PART NUMBER	DESCRIPTION	QTY
2	N/A	FRONT HITCH CMP	1
3	CY-1A7880-10640	PIN	1
4	CY-22372-160000	PIN, 16	2
5	CY-26106-100302	BOLT, 10 X 30	4

Copyright 2007 Cub Cadet Yanmar LLC

FIG. 104

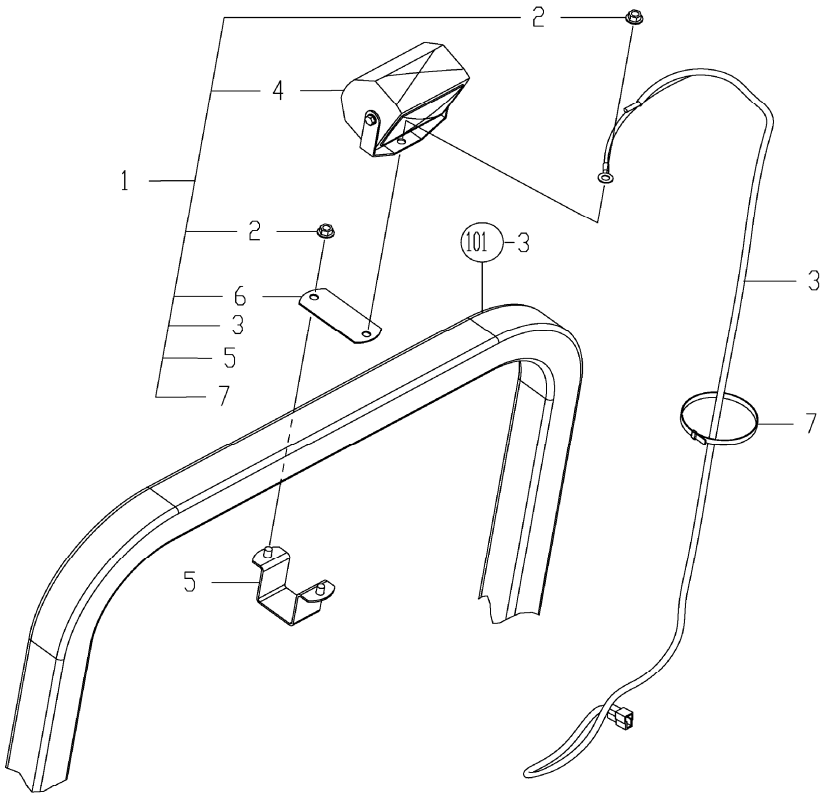

REF NO.	PART NUMBER	DESCRIPTION	QTY
1	CY-1A7880-54010	LAMP KIT, WORK	1
2	CY-194990-22140	NUT M8	2
3	CY-1A7880-51300	CABLE, WORK ASSY	1
4	CY-194640-54100	LAMP, WORK ASSY	1
4	CY-194640-54170	REPLACEMENT BULB	1
5	CY-1A7880-58200	STAY A, WORK LAMP	1
6	CY-1A7880-58250	STAY B, WORK LAMP	1
7	CY-19622-250001	BAND 250	3

Copyright 2007 Cub Cadet Yanmar LLC

THIS PAGE INTENTIONALLY LEFT BLANK

Copyright 2007 Cub Cadet Yanmar LLC



Sc Series Compact Tractor

Sc2400

Cub Cadet Yanmar LLC.
P.O.Box 361052
Cleveland, OH 44136-1052